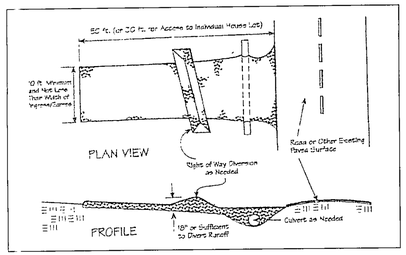

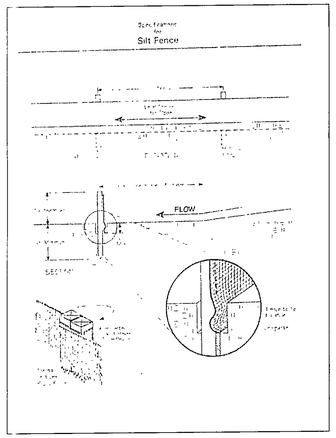

Temporary Seeding Species Selection			
Seeding Dates	Species	Lb /1,000 ft²	Per Ac
March 1 to August 15	Oats Tall Fescue Annual Ryegrass	3 1 1	4 bushel 40 lb. 40 lb
	Perennial Ryegrass Tall Fescue Annual Ryegrass	1 1 1	40 lb. 40 lb. 40 lb.
August 16 to November 1	Rye Tall Fescue Annual Ryegrass	3 1 1	2 bushel 40 lb 40 lb.
	Wheat Tall Fescue Annual Ryegrass	3 1 1	2 bushel 40 lb. 40 lb.
	Perennial Ryegrass Tall Fescue Annual Ryegrass	1 1 1	40 lb. 40 lb. 40 lb
November 1 to Spring Seeding	Use mulch only, sodding practices or dormant seeding.		

Note: Other approved seed species may be substituted

Erosion and Sediment Control Schedule

Ingress-Egress
A stone access drive complete with under lying geo-textile fabric (20 feet wide and 50 feet long) for ingress and egress at the site shall be installed. This drive shall be only entrance and exit to the site.

Silt Fence
A silt fence shall be installed prior to any earthwork activities at the site in the locations shown on the site plan as well as along the front of any lot that slopes towards the street.

Temporary Seeding
Disturbed areas of the site that are to remain idle for more than thirty(30) days shall be properly seeded and straw mulched within seven(7) days of completion of initial grading.
Temporary seeding and mulching over a thirty(30) foot strip of the entire front of the lot shall be maintained on the site once initial grading is complete.

Stabilization of critical areas within fifty(50) feet of any stream or wetland shall be complete within two(2) days of the disturbance if the site is to remain inactive for longer than fourteen(14) days.

Mulching
Straw-mulch shall be applied at a rate of 1 bale per every ten (10) feet of curb, at a width of thirty(30) feet to the entire length of the lot. Wood chips may also be used but must be spread at a minimum depth of four inches over the thirty-foot width and must be accompanied by a properly installed silt fence.

Maintenance
Erosion and sediment controls shall be inspected every seven(7) days with 24 hours of a 0.5" or greater rainfall event. Necessary repairs shall be made at this time.

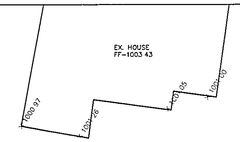

NOTES:

1. DESIGN STATION AND BASE TO PREVENT FLOTATION IN AREAS OF HIGH GROUND WATER.
2. ALL JOINTS AND PENETRATIONS SHALL BE WATERTIGHT TO PREVENT INFILTRATION OF GROUND/SURFACE WATER.
3. STATION PUMP SHALL BE DESIGNED TO DOSE THE MOUND BETWEEN 4-8 CYCLES.
4. FORCE MAIN, DISTRIBUTION LATERAL DESIGN AND DETAILED STATION INCLUDING DIMENSIONS, AND ELEVATIONS SHALL BE SUPPORTED BY CALCULATIONS AND OTHER APPROPRIATE DOCUMENTATION IN PLAN SUBMITTALS.
5. INSTALLATION SHALL MEET ALL APPLICABLE CODES/CRITERIA.
6. CONTROL PANEL WITH VISUAL AND AUDIBLE HIGH LEVEL ALARM SHALL BE LOCATED IN THE GARAGE, BASEMENT OR OTHER SUITABLE INDOOR LOCATION.
7. SPECIAL CONSIDERATION SHALL BE GIVEN WHEN DESIGNING A DOWNHILL PUMPING APPLICATION TO PREVENT SIPHONING. PROVIDE A BLEEDER HOLE TO PREVENT SIPHONING.
8. WET WELL CAPACITY TO ACCOUNT FOR PIPING DRAINING BACK TO DOSING STATION.
9. THE FOLLOWING TABLE INDICATES THE NECESSARY VOLUME CAPACITY BETWEEN FLOATS:

LOCATION	RECOMMENDED MINIMUM VOLUME CAPACITY
BETWEEN PUMP OFF FLOAT & WARNING PUMP	.75*DDF+DPV (a)
BETWEEN WARNING PUMP FLOAT & HIGH WATER ALARM FLOAT	.25*DDF+DPV (b)
ALARM FLOAT TO THE DOSING CHAMBER INLET	DDF (c)

DDF - DAILY DESIGN FLOW
DPV - DISCHARGE PIPE VOLUME

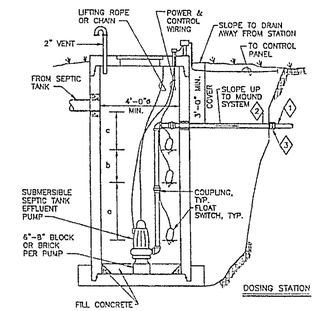

4. DESIGN ELEVATIONS BY ENGINEER/DESIGNER.
3. SCHD. 40 PRESSURE RATED ADAPTER COUPLING.
2. SCHD. 40 GALV. STL. ACROSS EXCAVATION.
1. SCHD. 40 PVC OR OTHER APPROVED PRESSURE PIPE AND FITTINGS MATERIAL.

LAKE COUNTY GENERAL HEALTH DISTRICT

LAKE COUNTY MOUND SYSTEM DOSING STATION

DATE: AUGUST, 1998
REVISED: JULY, 1999
FIGURE 11

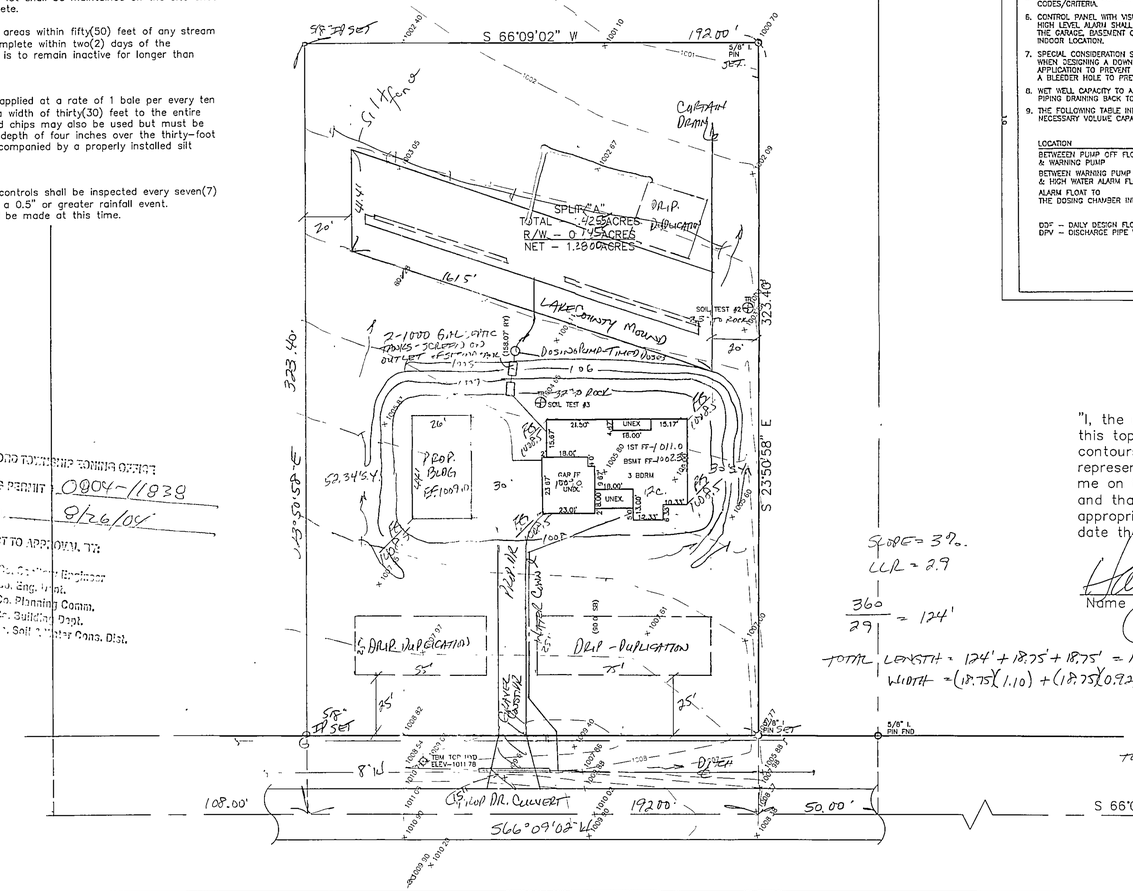

GIRDLED ROAD - 66'

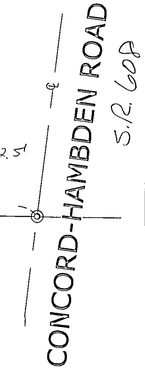

S 66°09'02" W 992.81'

TBM TOP HYDRANT ELEV=11.78

SLOPE = 3%
LLR = 2.9

$\frac{360}{29} = 124'$

TOTAL LENGTH = 124' + 18.75' + 18.75' = 161.5' + 40' = 201.5'
WIDTH = (18.75)(1.10) + (18.75)(0.92) + 3.5 = 41.4'

DRIP DISTRIBUTION AREA
LENGTH = 124'
TOTAL LENGTH (3 ZONES x 2 x 4.75) + 124 = 152.5'
75' + 5' + 22.5' = 152.5'

"I, the undersigned hereby certify that this topography indicated by 6", 1', or 2' contours, and elevations shown hereon represent an actual field survey made by me on the 5TH day of AUG., 20 04 and that the elevations were taken as appropriate intervals and that as of that date they existed as indicated hereon."

Harry K. Jones #6343
Name Reg. No.

This project is exempt
ESC Plan Review
Date 8/23/04
Lake SWCD

Stormwater Management Plan
Approved as shown and/or noted
JOHN C. GILLS, P.E.
County Engineer
By Joe Embry
6/14 Date 9-1-04
- 15" Drive culvert
- Silt fence as shown
- Construction drive

REVIEWED AND ACCEPTED
LAKE COUNTY GENERAL
HEALTH DISTRICT
Date 5-24-04 By

SEWAGE DISPOSAL PERMIT MUST BE OBTAINED BY A LAKE COUNTY LICENSED INSTALLER BEFORE INSTALLATION IS STARTED

CONCORD TOWNSHIP ZONING OFFICE
ZONING PERMIT 0804-11838
ISSUED 8/26/04
SUBJECT TO APPROVAL BY:
Lake Co. Sanitary Engineer
Lake Co. Eng. Dept.
Lake Co. Planning Comm.
Lake Co. Building Dept.
Lake Co. Soil & Water Cons. Dist.

EXISTING UTILITIES NOTE:
THE SIZE AND LOCATION, BOTH HORIZONTAL AND VERTICAL OF THE UNDERGROUND UTILITIES SHOWN HEREON, HAVE BEEN OBTAINED BY A SEARCH OF AVAILABLE RECORDS. VERIFICATION BY FIELD OBSERVATION HAS BEEN CONDUCTED WHERE PRACTICAL. HOWEVER, BABCOCK, JONES AND ASSOCIATES INC. DOES NOT GUARANTEE THE COMPLETENESS NOR ACCURACY THEREOF.

STATE OF OHIO HARRY K. JONES JR. E-6343 REGISTERED PROFESSIONAL SURVEYOR

REV NO.	DESCRIPTION	DATE	BY	CHK'D
1	REVISED LOT SIZE AND MOUND	5-17-04	HJ	HJ
2	REVISED DRIP DISTRIBUTION	8-24-04	HJ	HJ

BABCOCK, JONES AND ASSOCIATES, INC
CIVIL ENGINEERS – SURVEYORS – LAND PLANNERS
PAINESVILLE OHIO 44077
PHONE: 440-357-1811 FAX: 440-357-9173

DATE	8/10/04
DESIGN BY	HJ
DRAWN BY	NS
APPROVED BY	HJ

SITE PLAN
FOR
JOE & DOLORES MADACH
12231 GIRDLED ROAD
CONCORD TOWNSHIP LAKE COUNTY STATE OF OHIO

SCALE 1"=30'
JOB NO. 02-250-A
SHEET 1 OF 2