NOTES:
1. PLOW ENTIRE 25.5' x 107' AREA OF DRAINFIELD (SAME WAY YOU WOULD A REGULAR MOUND).
2. ADD MOUND SAND OVER ENTIRE 25.5' x 107' BASAL AREA.
3. PLACE DRIP TUBING ON TOP OF SAND IN THE 7.5' x 89' UPPER SECTION OF DRAINFIELD.
4. ADD 8" OF TOPSOIL OVER THE TOP OF DRIP TUBING IN THE 7.5' x 89' AREA.
5. COVER ENTIRE 25.5' x 107' AREA OF DRAINFIELD WITH A MINIMUM COVER OF 8" TOPSOIL WITH A TURTLE-BACK GRADE FOR POSITIVE DRAINAGE.
6. AN AGGRESSIVE TURF COVER OVER ENTIRE 25.5' x 107' AREA IS RECOMMENDED (PREFERABLY SOD).
7. SAND TO MEET ASTM C33 STANDARDS.
8. SAND THICKNESS FROM THE BASE OF THE DRIP LINES TO THE TOP OF THE PLOWED SURFACE MUST BE 2'-4".

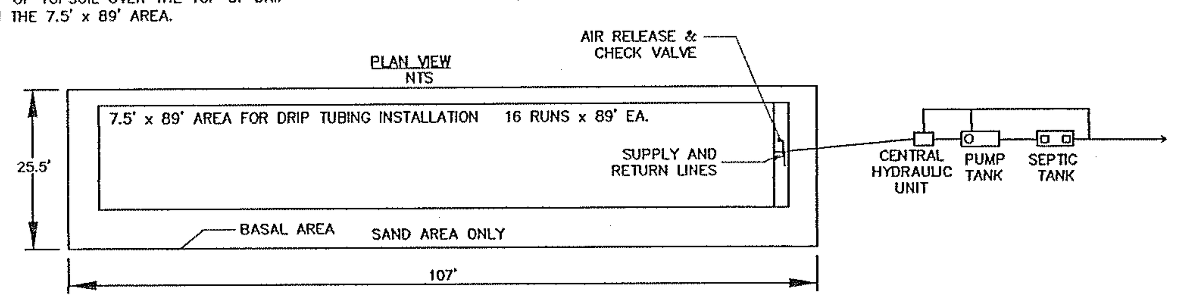

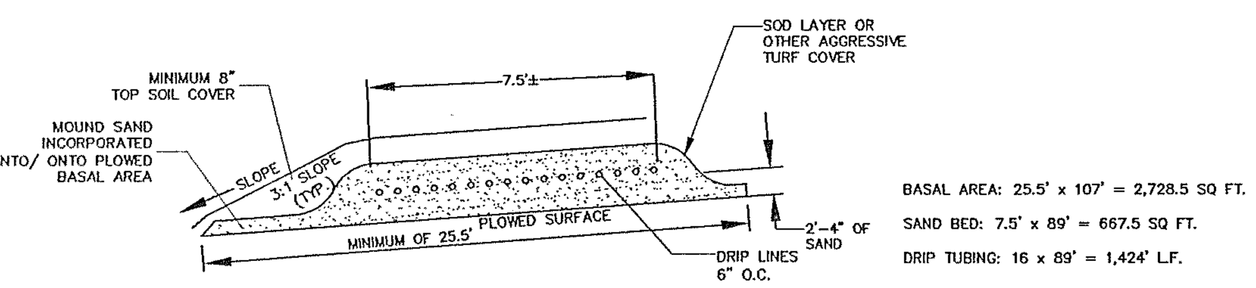

BASAL AREA: 25.5' x 107' = 2,728.5 SQ FT.
SAND BED: 7.5' x 89' = 667.5 SQ FT.
DRIP TUBING: 16 x 89' = 1,424' L.F.

MICRO MOUND SECTION
NTS

TEMPORARY SEEDING SPECIFICATIONS

SEEDING DATES	SPECIES	LB./1,000 FT.	PER ACRE
MARCH 1 TO AUGUST 15	OATS TALL FESCUE ANNUAL RYEGRASS	3 1 1	4 BUSHEL 40 LB. 40 LB.
	PERENNIAL RYEGRASS TALL FESCUE ANNUAL RYEGRASS	1 1 1	40 LB. 40 LB. 40 LB.
AUGUST 16 TO NOVEMBER 1	RYE TALL FESCUE ANNUAL RYEGRASS	3 1 1	2 BUSHEL 40 LB. 40 LB.
	WHEAT TALL FESCUE ANNUAL RYEGRASS	3 1 1	2 BUSHEL 40 LB. 40 LB.
	PERENNIAL RYEGRASS TALL FESCUE ANNUAL RYEGRASS	1 1 1	40 LB. 40 LB. 40 LB.
NOVEMBER 1 TO SPRING SEEDING	USE MULCH ONLY, SODDING PRACTICES OR DORMANT SEEDING.		
*NOTE: OTHER APPROVED SEED SPECIES MAY BE SUBSTITUTED.			

ADDITIONAL TEMPORARY STABILIZATION NOTES:

1.) TEMPORARY SEEDING MUST BE APPLIED WITHIN 7 DAYS OF THE LAST DISTURBANCE OF ANY AREA THAT WILL BE DORMANT FOR 21 DAYS OR LONGER.

2.) TEMPORARY SEEDING IS REQUIRED WITHIN 7 DAYS OF LAST DISTURBANCE FOR ANY AREAS THAT WILL REMAIN IDLE OVER THE WINTER.

3.) TEMPORARY SEEDING IS REQUIRED WITHIN 2 DAYS OF LAST DISTURBANCE FOR ANY WITHIN 50 FEET OF A STREAM.

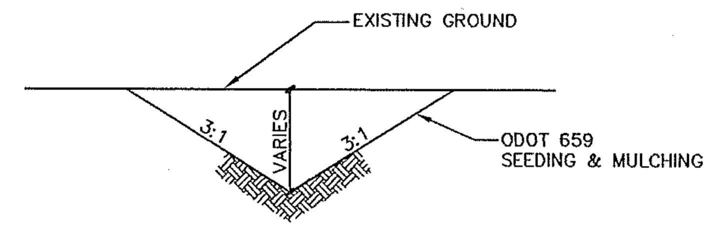

SWALE DETAIL
NTS

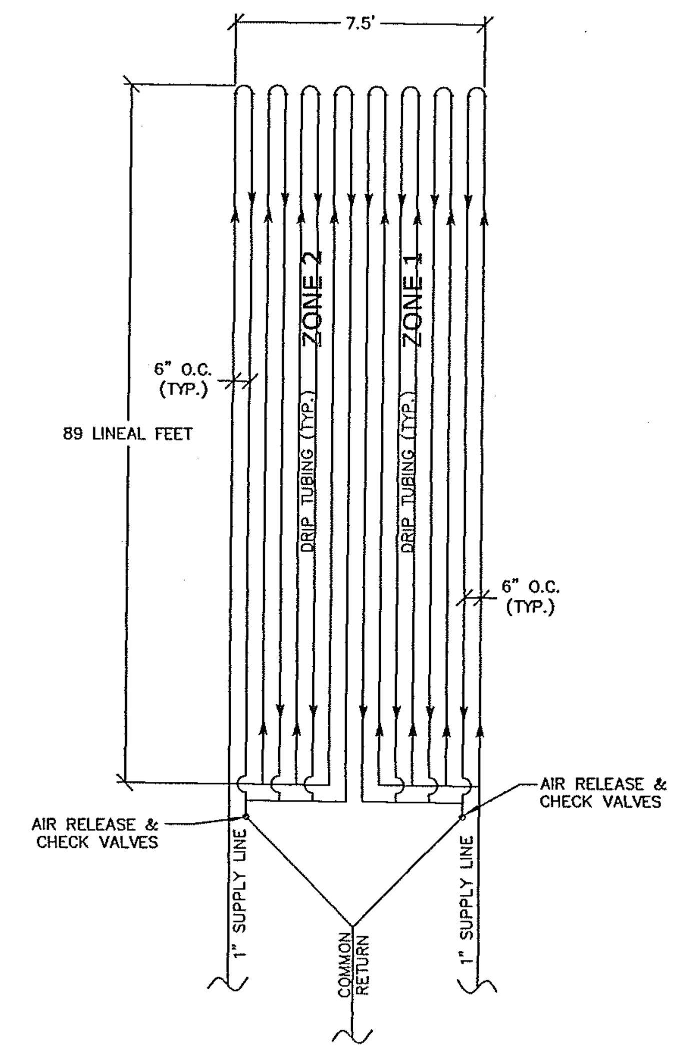

DRIP ZONE DETAIL
NTS

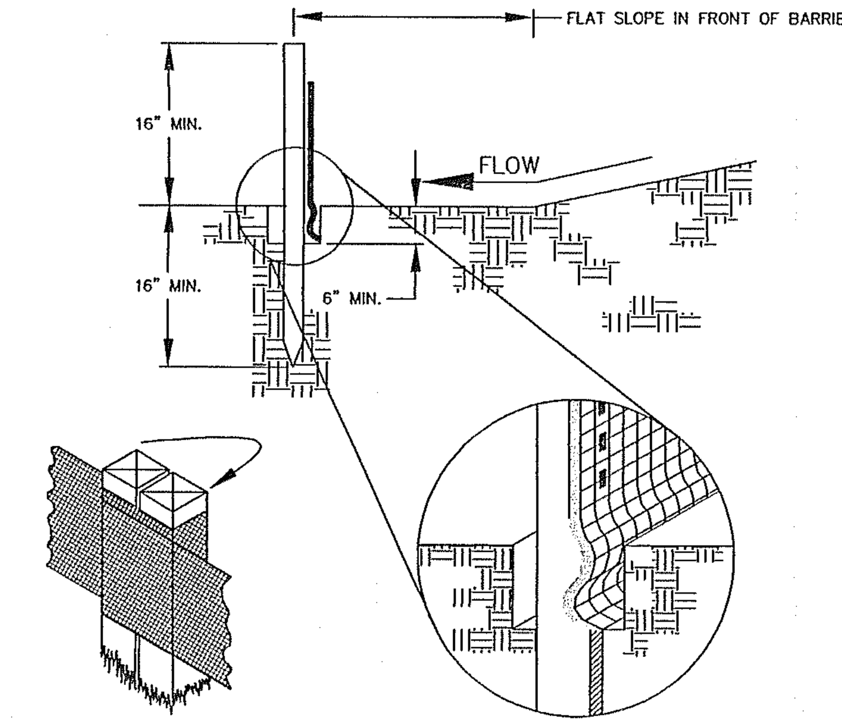

SILT FENCE DETAIL
NTS

MAXIMUM DRAINAGE AREA (IN ACRES) TO 100 LINEAR FEET OF SILT FENCE	RANGE OF SLOPE FOR A PARTICULAR DRAINAGE AREA (IN PERCENT)
0.5	< 2%
0.25	≥ 2% BUT < 20%
0.125	≥ 20% BUT < 50%

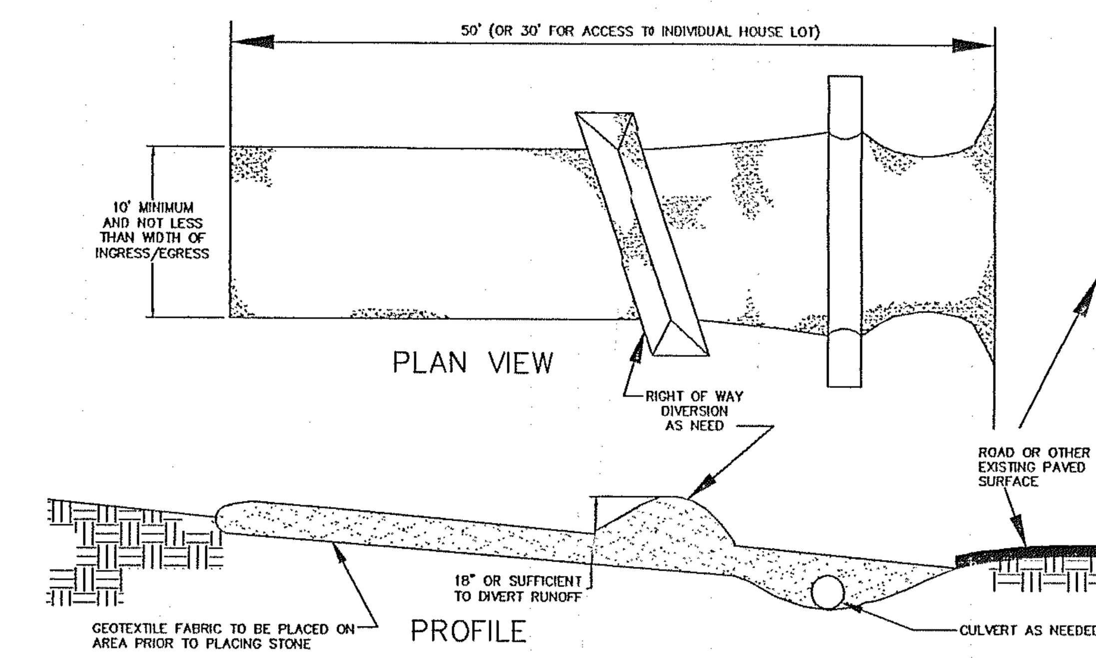

STONE CONSTRUCTION ENTRANCE DETAIL
NTS

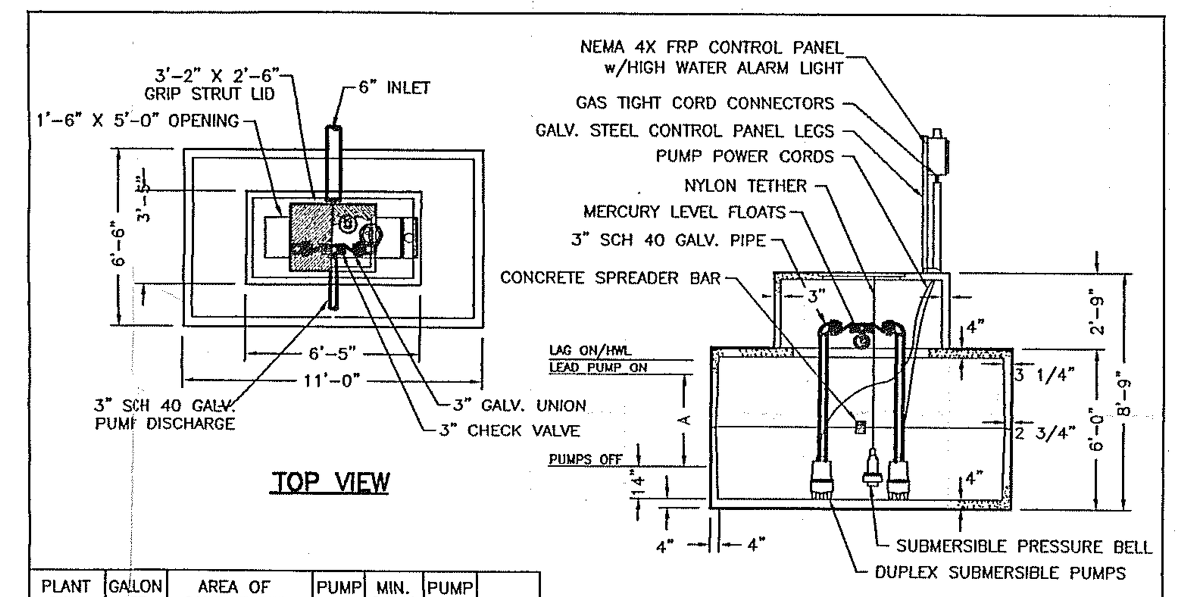

PLANT SIZE (G.P.D.)	GALLON PER DOSE	AREA OF SAND FILTER DOSED (SQ. FT.)	PUMP H.P.	MIN. G.P.M.	PUMP RUN TIME	A
16000	1250	667	3/4	130	9.6	2'-8"
17000	1315	708	1	160	8.3	2'-10"
17500	1318	730	1	160	8.6	2'-11"
18000	1407	750	1	160	8.8	3'-0"
19000	1485	792	1	160	9.3	3'-2"

THIS DRAWING IS THE PROPERTY OF MACK INDUSTRIES, INC., AND IT OR THE TECHNOLOGY CONTAINED HEREIN MAY NOT BE REPRODUCED NOR USED EXCEPT AS ORIGINALLY INTENDED WITHOUT THE EXPRESSED CONSENT OF MACK INDUSTRIES, INC.

2000 GALLON DOSING TANK

DRAWN BY: ERL	SCALE: 1/4" = 1'-0"	DRAWING NO.:
DATE: 8/7/95	REV: 3/22/05 CJ	K-4

MACK INDUSTRIES, INC.
201 COLUMBIA ROAD, VALLEY CITY, OHIO 44280 (330) 483-3111

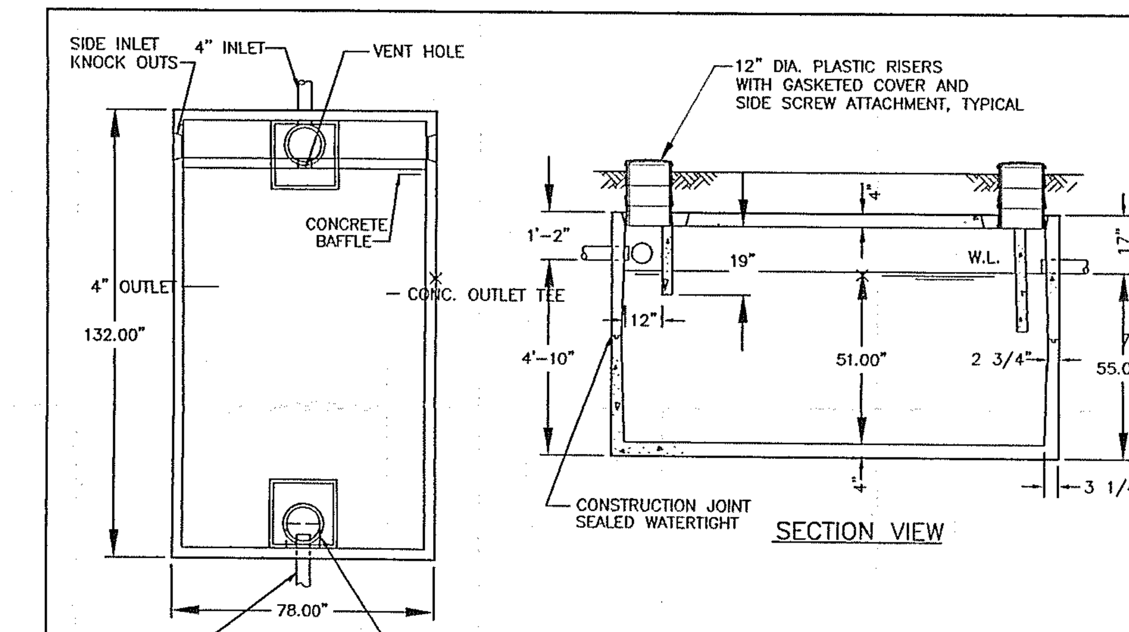

NOTES:
1. REINFORCED PRECAST CONCRETE SHALL HAVE A COMPRESSIVE STRENGTH OF 5000 PSI @ 28 DAYS.
2. 'POLYLOK' SEALS SHALL BE PROVIDED FOR INLET AND OUTLET CONNECTIONS. SEALS CAN BE USED FOR EITHER 3" OR 4" DIA. PIPE.

2000 GALLON SEPTIC TANK

DRAWN BY: BK	SCALE: 3/8"=1'-0"	DRAWING NO.:
DATE: 5-9-95	REV: 3/4/02 ADM	P-4

MACK INDUSTRIES, INC.
201 COLUMBIA ROAD, VALLEY CITY, OHIO 44280 (216)483-3111

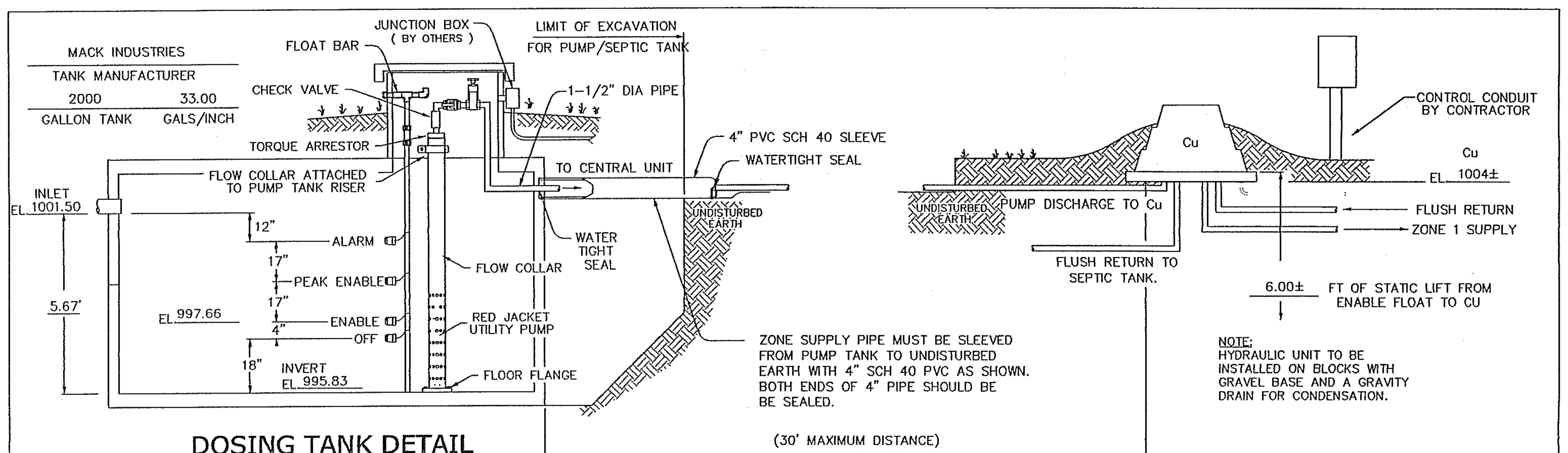

ZONE SUPPLY PIPE MUST BE SLEEVED FROM PUMP TANK TO UNDISTURBED EARTH WITH 4" SCH 40 PVC AS SHOWN. BOTH ENDS OF 4" PIPE SHOULD BE BE SEALED.

NOTE:
HYDRAULIC UNIT TO BE INSTALLED ON BLOCKS WITH GRAVEL BASE AND A GRAVITY DRAIN FOR CONDENSATION.

DOSING TANK DETAIL
NTS

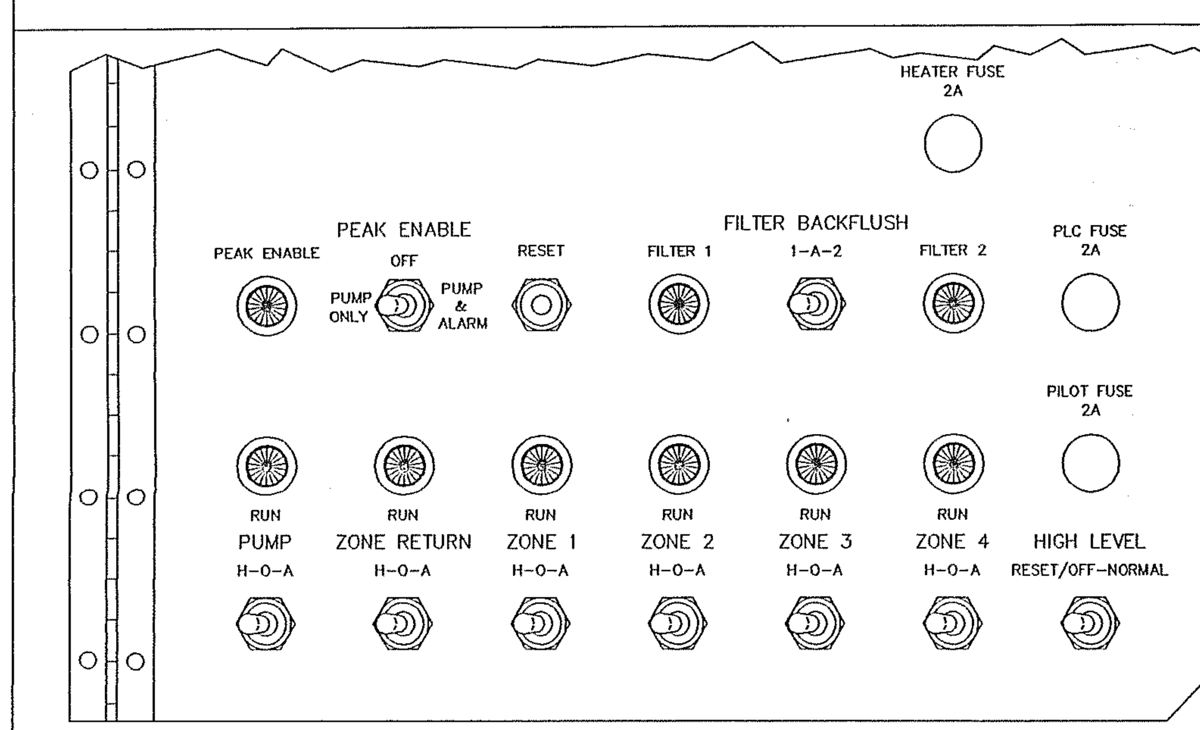

INNER DOOR LAYOUT
NTS

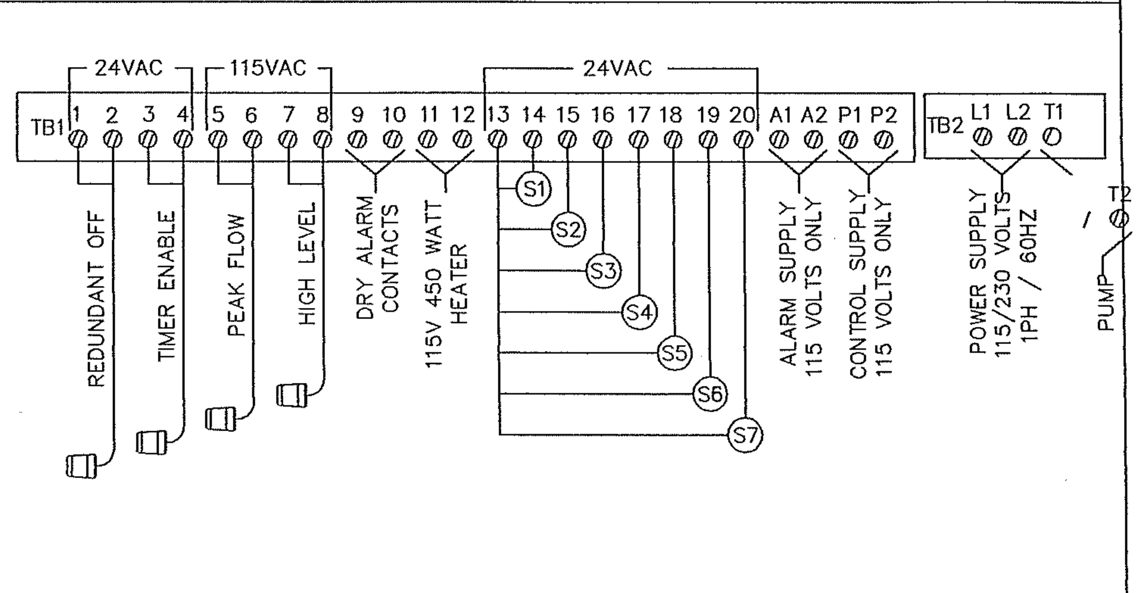

TITLE : PUMP & CONTROL

AMERICAN MANUFACTURING COMPANY INC.
5517 WELLINGTON ROAD, GAINESVILLE VA22065 PHONE :703-754-0077

NOTE: ALL PUMP AND CONTROL INFORMATION TO BE SUPPLIED BY AMERICAN MANUFACTURING CO.

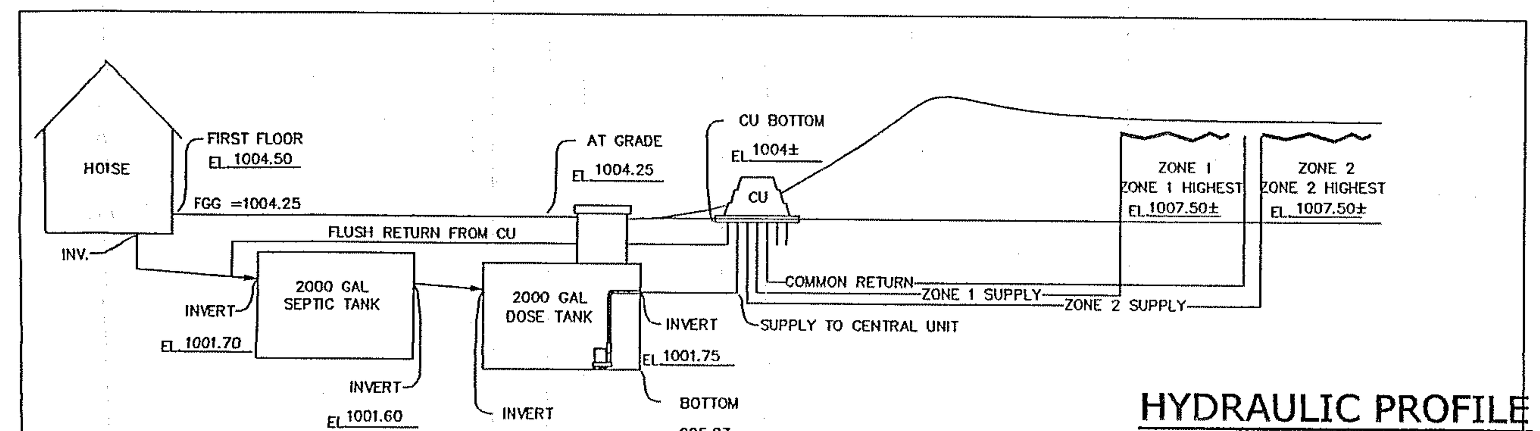

HYDRAULIC PROFILE
NTS

NOTE:
1. THE IR RELEASE VALVE SHALL E PLACED AT THE HIGHES POINT ON THE RETURN LINE OF EACH ZONE.
2. EACH ZONE TO HAVE THE SAME VALVE BOX SETUP AND THEREAFTER CONNECTED.

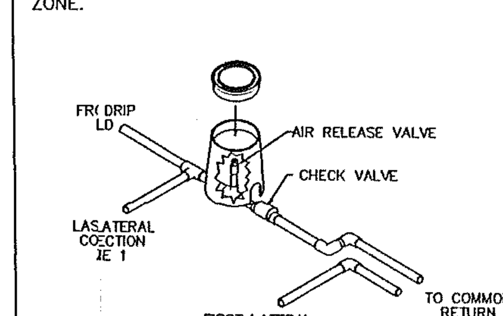

ĄR RELEASE CHECK VALVE DETAIL
NTS

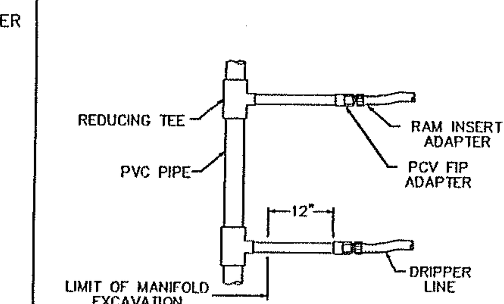

TYPICAL MANIFOLD CONNECTION
NTS

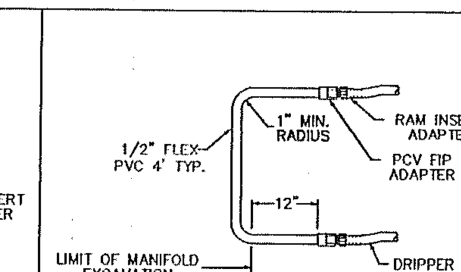

TYPICAL DRIP LOOP CONNECTION
NTS

AMERICAN MANUFACTURING CO.
5517 WELLINGTON RD. GAINESVILLE VA 20155; 703-754-0077

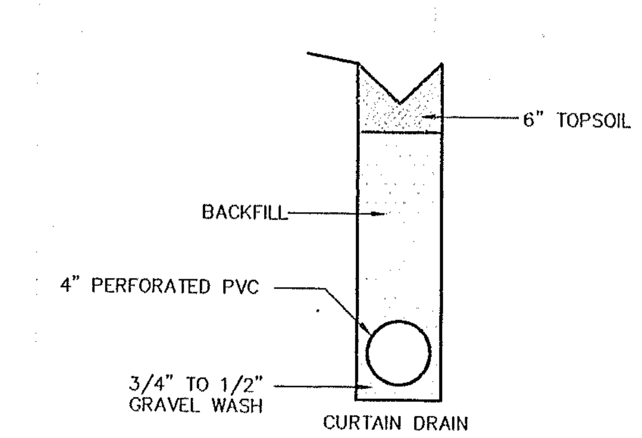

NOTES:
- WIDTH OF TRENCH FOR CURTAIN DRAIN TO BE 8".
- MINIMUM SLOPE OF CURTAIN DRAIN WILL BE 6" IN 10'.
- THE CURTAIN DRAIN WILL HAVE AN INSPECTION PORT AT THE HIGH POINT & AT THE 2 CORNERS.
- THE OUTLET OF THE CURTAIN DRAIN WILL BE PROTECTED FROM THE ENTRANCE OF SMALL ANIMALS.

CURTAIN DRAIN DETAIL
NTS

Rev.	Description	Date	By	CH'K'D.

Septic Details for Wayne Wolfe
Concord Township ~ Lake County ~ Ohio

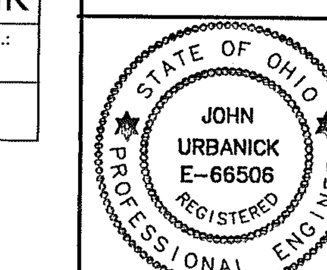

Drawn By: JML
Checked By:
Approved By:
Date: 1/11/06

Greenland Consulting, Inc.
7757 Auburn Road., Unit #9, Concord, OH 44077
Phone: (440) 352-1794 Fax: (440) 352-1796
E-Mail: green-land@sbcglobal.net

Scale: Horiz. 1"=N/A Vert. 1"=N/A
Sheet No. 2 Of 2
Filename: or

P:\SDSKPROJ\05-068\dwg\db.dwg, Details, 9/16/2005 11:48:30 AM, Joe, Greenland HP430.pc3