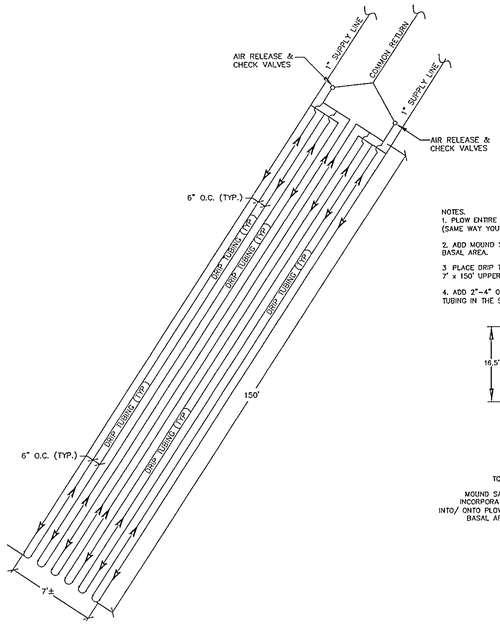

DRIP ZONE DETAIL

NOT TO SCALE

NOTES.

1. PLOW ENTIRE 17' x 150' AREA OF DRAINFIELD (SAME WAY YOU WOULD A REGULAR MOUND).
2. ADD MOUND SAND OVER ENTIRE 17' x 150' BASAL AREA.
3. PLACE DRIP TUBING ON TOP OF SAND IN THE 7' x 150' UPPER SECTION OF DRAINFIELD.
4. ADD 2"-4" OF MOUND SAND OVER TOP OF DRIP TUBING IN THE 9' x 150' AREA.
5. COVER ENTIRE 17' x 150' AREA OF DRAINFIELD WITH A MINIMUM COVER OF 8" TOPSOIL WITH A TURTLE-BACK GRADE FOR POSITIVE DRAINAGE.
6. AN AGGRESSIVE TURF COVER OVER ENTIRE 17' x 150' AREA IS RECOMMENDED (PREFERABLY SOD).
7. SAND TO MEET ASTM C33 STANDARDS.

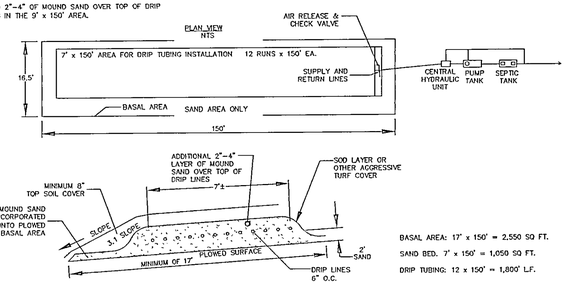

BASAL AREA: 17' x 150' = 2,550 SQ FT.

SAND BED: 7' x 150' = 1,050 SQ FT.

DRIP TUBING: 12 x 150' = 1,800' L.F.

ZONE 1 MICRO MOUND

CROSS-SECTION
NTS

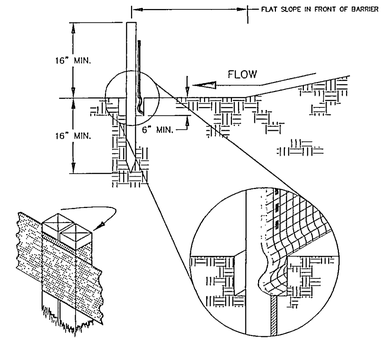

SILT FENCE DETAIL

NTS

MAXIMUM DRAINAGE AREA (IN ACRES) TO 100 LINEAR FEET OF SILT FENCE	RANGE OF SLOPE FOR A PARTICULAR DRAINAGE AREA (IN PERCENT)
0.5	< 2%
0.25	≥ 2% BUT < 20%
0.125	≥ 20% BUT < 50%

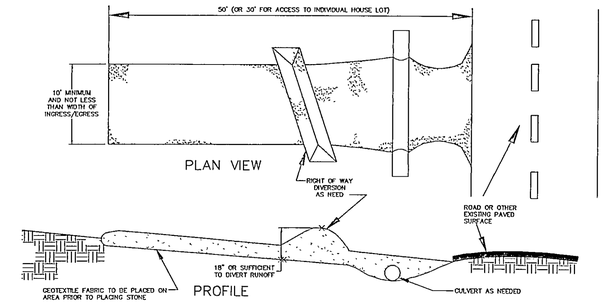

CONSTRUCTION ENTRANCE DETAIL

NTS

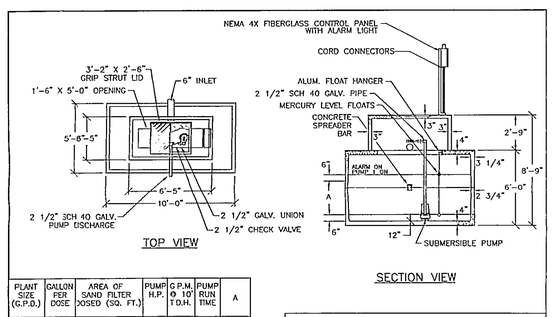

PLANT SIZE (G.P.D.)	GALLON PER DOSE	AREA OF SAND FILTER DOSED (SQ. FT.)	PUMP H.P. @ 10' T.D.H.	G.P.M. @ 10' T.D.H.	PUMP RUN TIME	A
11000	859	458	1/2	110	7.8	2'-6"
12000	935	500	1/2	110	8.5	2'-9"
13000	975	521	1/2	110	8.9	2'-10"
14000	1014	542	1/2	110	9.2	2'-11"
15000	1163	625	3/4	130	9.0	3'-4"

1500 GALLON DOSING TANK

DRAWN BY: ERL | SCALE: 1/4" = 1'-0" | DRAWING NO.: K-3
DATE: 12-17-97 | REV:

MACK INDUSTRIES, INC.
201 COLUMBIA ROAD, VALLEY CITY, OHIO 44280 (330)483-3111

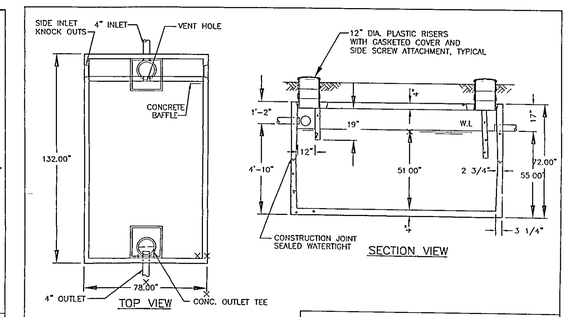

NOTES:

1. REINFORCED PRECAST CONCRETE SHALL HAVE A COMPRESSIVE STRENGTH OF 5000 PSI @ 28 DAYS.
2. "POLYLOK" SEALS SHALL BE PROVIDED FOR INLET AND OUTLET CONNECTIONS. SEALS CAN BE USED FOR EITHER 3" OR 4" DIA. PIPE.

2000 GALLON SEPTIC TANK

DRAWN BY: BK | SCALE: 3/8"=1'-0" | DRAWING NO.: P-4
DATE: 5-9-95 | REV. 3/4/02 ADM

MACK INDUSTRIES, INC.
201 COLUMBIA ROAD, VALLEY CITY, OHIO 44280 (216)483-3111

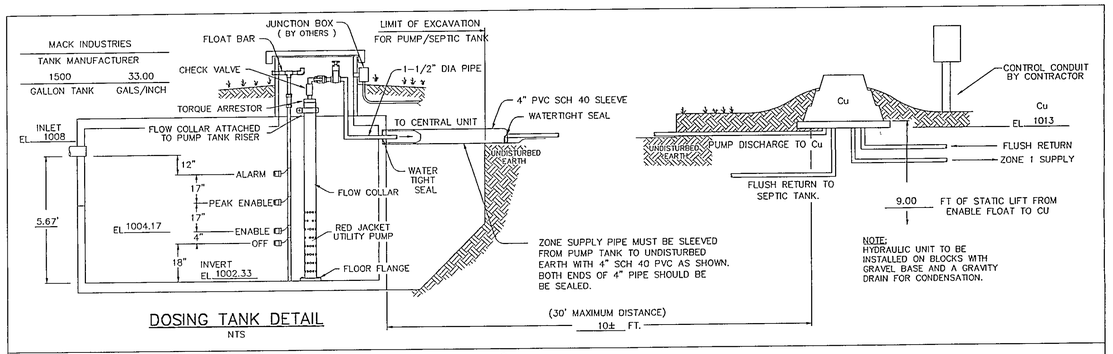

DOSING TANK DETAIL

NTS

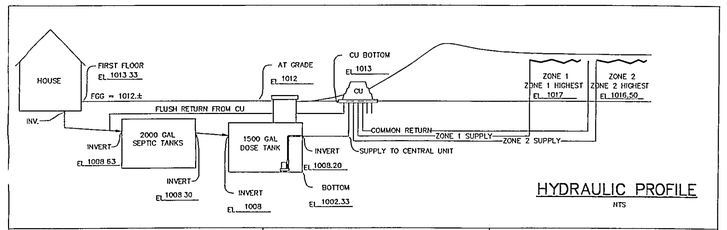

HYDRAULIC PROFILE

NTS

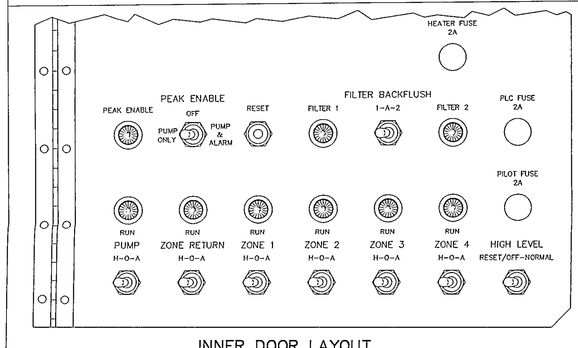

INNER DOOR LAYOUT

NTS

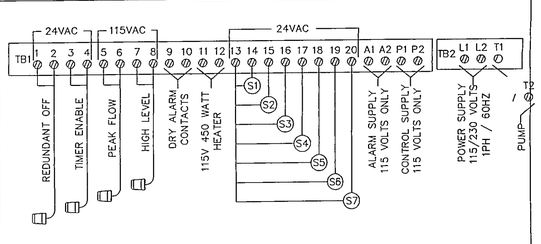

TITLE : PUMP & CONTROL

AMERICAN MANUFACTURING COMPANY INC.
5517 WELLINGTON ROAD, GAINESVILLE VA22065 PHONE :703-754-0077

NOTE: ALL PUMP AND CONTROL INFORMATION TO BE SUPPLIED BY AMERICAN MANUFACTURING CO.

NOTE:

1. THE AIR RELEASE VALVE SHALL BE PLACED AT THE HIGHEST POINT ON THE RETURN LINE OF EACH ZONE.
2. EACH ZONE TO HAVE THE SAME VALVE BOX SETUP AND THEREAFTER CONNECTED.

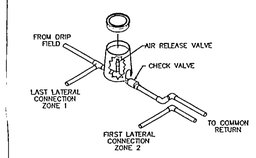

AIR RELEASE & CHECK VALVE DETAIL

NTS

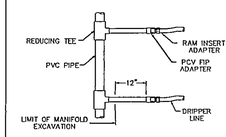

TYPICAL MANIFOLD CONNECTION

NTS

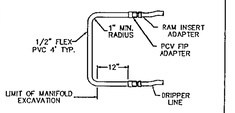

TYPICAL DRIP LOOP CONNECTION

NTS

AMERICAN MANUFACTURING CO.
5517 WELLINGTON RD. GAINESVILLE VA 20155; 703-754-0077

Rev.	Description	Date	By	CHK'D.
1	REVISED AS PER LCHD	2/2/04	JML	JTU
2	REVISED AS PER LCHD	2/19/04	JML	JTU

Site and Septic Details
P.P.N. 84-2-35 on
Cirdled Road for
Ed Polo Construction
Concord Township ~ Lake County ~ Ohio

STATE OF OHIO JOHN URBANICK E-66506 REGISTERED PROFESSIONAL ENGINEER

Drawn By: JML
Checked By:
Approved By:
Date: 2/19/04

Greenland Consulting, Inc.
6520 Hopkins Road Mentor, OH 44060
Phone: (440) 205-8167 Fax: (440) 205-1923
E-Mail: greenlandwatt.net

Scale: Horiz. 1"=N/A Vert. 1"=N/A

Sheet No.	Of
2	2

Filename: 04-001/db

P:\2004\PROJ\04-001\dwg\db.dwg, Details, 02/19/2004 9:53:08 AM, JOE, HP-33.pc3