CONCORD TOWNSHIP ZONING OFFICE
Zoning Permit # 0905-124005
Date Issued 9/9/05
Subject to Approval By:
Lake Co. Engr. Storm Water Mgmt.
Lake Co. Utilities Dept.
Lake Co. Soil & Water District
Lake Co. Health District
Lake Co. Building Dept.

SHEET / OF

NOT TO SCALE

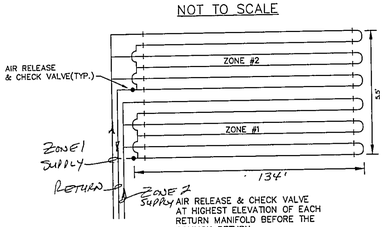

AIR RELEASE & CHECK VALVE AT HIGHEST ELEVATION OF EACH RETURN MANIFOLD BEFORE THE COMMON RETURN.

EACH LATERAL WILL FEED FROM THE LOWER RUN IN THE LATERAL AND RETURN FROM THE HIGHER RUN IN THE LATERAL.

"I CERTIFY THIS SEWAGE SYSTEM DESIGN MEETS THE MINIMUM REQUIREMENTS ESTABLISHED BY THE LCGHD IN THE HSTS GUIDANCE MANUAL, AND THE REQUIREMENTS AND RECOMMENDATIONS OF THE SYSTEM MANUFACTURER."

Harry Jones #6343
Name Reg. No.

PARCEL 9

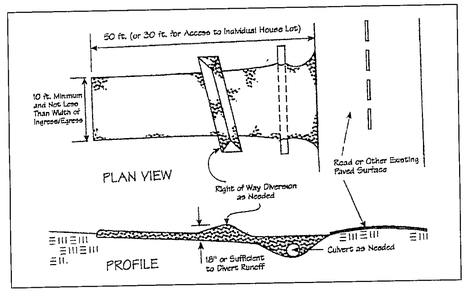

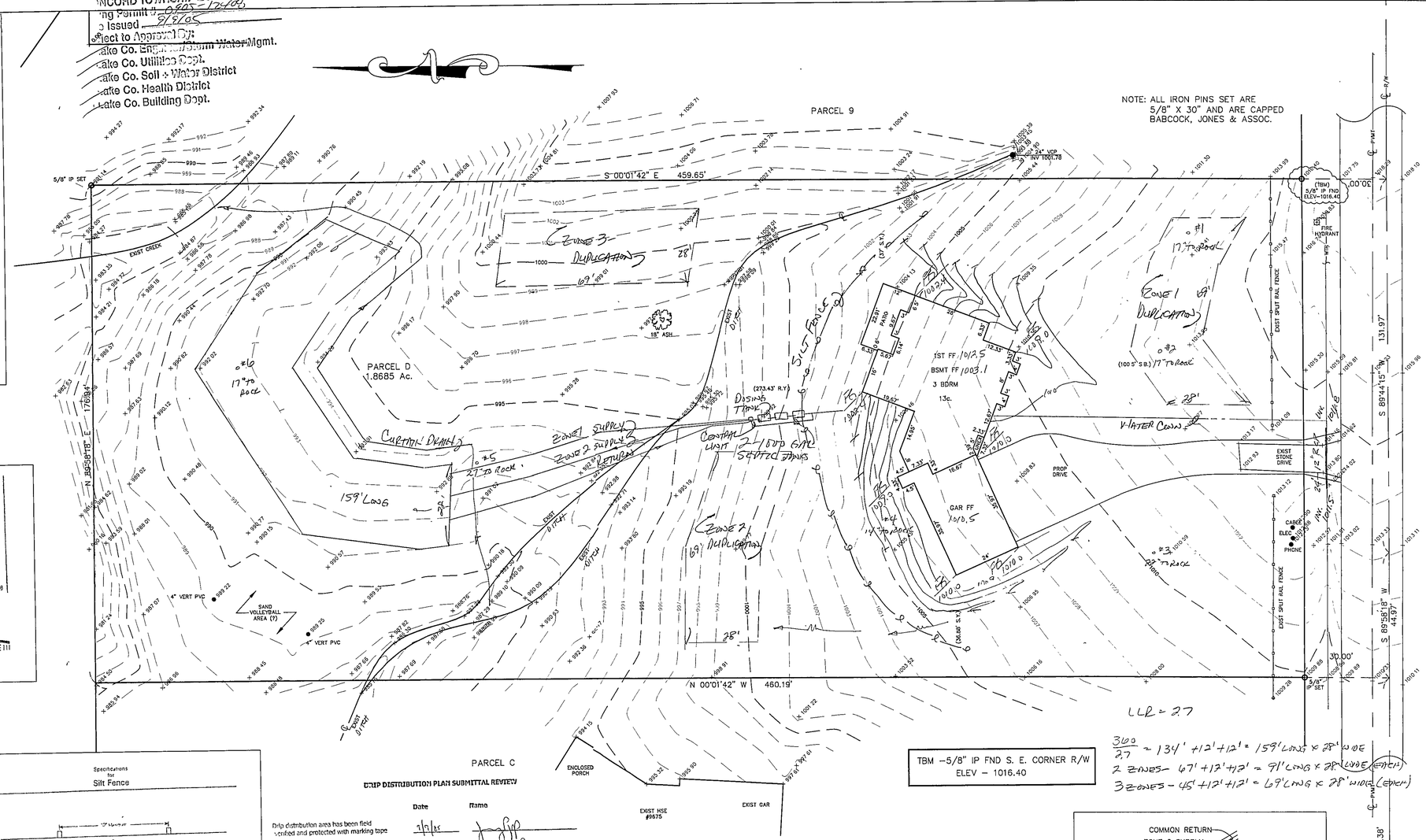

TBM –5/8" IP FND S. E. CORNER R/W
ELEV – 1016.40

LLR = 2.7

$\frac{360}{2.7}$ = 134' + 12' + 12' = 159' LONG x 28' WIDE
2 ZONES – 67' + 12' + 12' = 91' LONG x 28' WIDE (LENGTH)
3 ZONES – 45' + 12' + 12' = 69' LONG x 28' WIDE (LENGTH)

Erosion and Sediment Control Schedule

Ingress–Egress
A stone access drive complete with under lying geo–textile fabric (20 feet wide and 50 feet long) for ingress and egress at the site shall be installed. This drive shall be the only entrance and exit to the site.

Silt Fence
A silt fence shall be installed prior to any earthwork activities at the site in the locations shown on the site plan as well as along the front of any lot that slopes towards the street.

Temporary Seeding
Disturbed areas of the site that are to remain idle for more than thirty(30) days shall be properly seeded and straw mulched within seven(7) days of completion of intitial grading.
Temporary seeding and mulching ao a thirty(30) foot strip of the entire front of the lot shall be maintained on the site once initial grading is complete.

Stabilization of critical areas within fifty(50) feet of any stream or wetland shall be complete within two(2) days of the disturbance if the site is to remain inactive for longer than fourteen(14) days.

Mulching
Straw–mulch shall be applied at a rate of 1 bale per every ten (10) feet of curb, at a width of thirty(30) feet to the entire length of the lot. Wood chips may also be used but must be spread at a minimum depth of four inches over the thirty–foot width and must be accompanied by a properly installed silt fence.

Maintenance
Erosion and sediment controls shall be inspected every seven(7) days or within 24 hours of a 0.5" or greater rainfall event. Necessary repairs shall be made at this time.

Specifications for Silt Fence

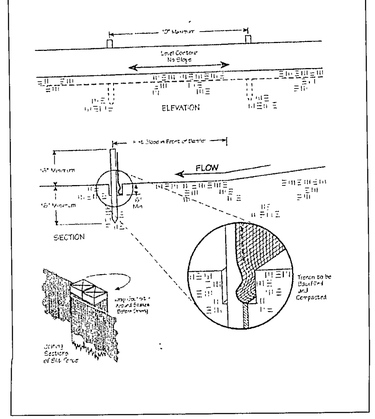

DRIP DISTRIBUTION PLAN SUBMITTAL REVIEW

	Date	Name
Drip distribution area has been field verified and protected with marking tape	9/9/05	
Plans submitted to LCGHD and meet design criteria	9/9/05	
Hydraulic calculations verified and accurate	9/9/05	

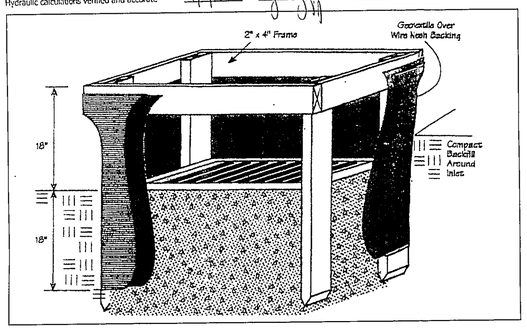

Temporary Seeding Species Selection			
Seeding Dates	Species	Lb./1,000 ft.²	Per Ac
March 1 to August 15	Oats Tall Fescue Annual Ryegrass	3 1 1	4 bushel 40 lb. 40 lb
	Perennial Ryegrass Tall Fescue Annual Ryegrass	1 1 1	40 lb. 40 lb. 40 lb.
August 16 to November 1	Rye Tall Fescue Annual Ryegrass	3 1 1	2 bushel 40 lb 40 lb.
	Wheat Tall Fescue Annual Ryegrass	3 1 1	2 bushel 40 lb. 40 lb.
	Perennial Ryegrass Tall Fescue Annual Ryegrass	1 1 1	40 lb. 40 lb. 40 lb.
November 1 to Spring Seeding	Use mulch only, sodding practices or dormant seeding.		

Note: Other approved seed species may be substituted

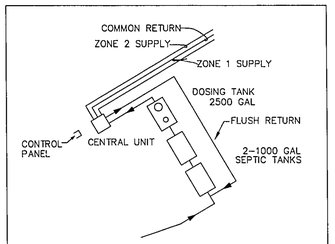

EXISTING UTILITIES NOTE:
THE SIZE AND LOCATION, BOTH HORIZONTAL AND VERTICAL OF THE UNDERGROUND UTILITIES SHOWN HEREON, HAVE BEEN OBTAINED BY A SEARCH OF AVAILABLE RECORDS. VERIFICATION BY FIELD OBSERVATION HAS BEEN CONDUCTED WHERE PRACTICAL, HOWEVER, BABCOCK, JONES AND ASSOCIATES, INC. DOES NOT GUARANTEE THE COMPLETENESS NOR ACCURACY THEREOF.

Stormwater Management Plan
Approved as shown and/or noted
JAMES R. GILLS, P.E.
County Drainage Engineer
By J. S. Date 9/13/05

STATE OF OHIO HARRY S. JONES, JR. S-6343 REGISTERED PROFESSIONAL SURVEYOR

REV NO.	DESCRIPTION	DATE	BY	CHK'D
1	ADDED NEW HOUSE	7/18/05	B.P.	H.J.
2	REVISED LOCATION OF HSE	8/18/05	B.P.	H.J.
3	REDESIGN DRIP DISTRIBUTION	9/1/05	HJ	HJ
4	" " " " "	9/7/05	HJ	HJ
5	" " " " "	9/9/05	HJ	HJ

BABCOCK, JONES AND ASSOCIATES, INC
CIVIL ENGINEERS – SURVEYORS – LAND PLANNERS
PAINESVILLE OHIO 44077

DATE	1/22/05
DESIGN BY	H.J.
DRAWN BY	B.P.
APPROVED BY	H.J.
CREW CHIEF	E.H.

SITE PLAN
FOR
DAVID KNOTT

LITTLE MOUNTAIN ROAD (P.P.#10A–22E–14)
CONCORD TOWNSHIP LAKE COUNTY STATE OF OHIO

SCALE 1"=20'
JOB NO 97–066–D
SHEET 1 OF 2

SHEET / OF

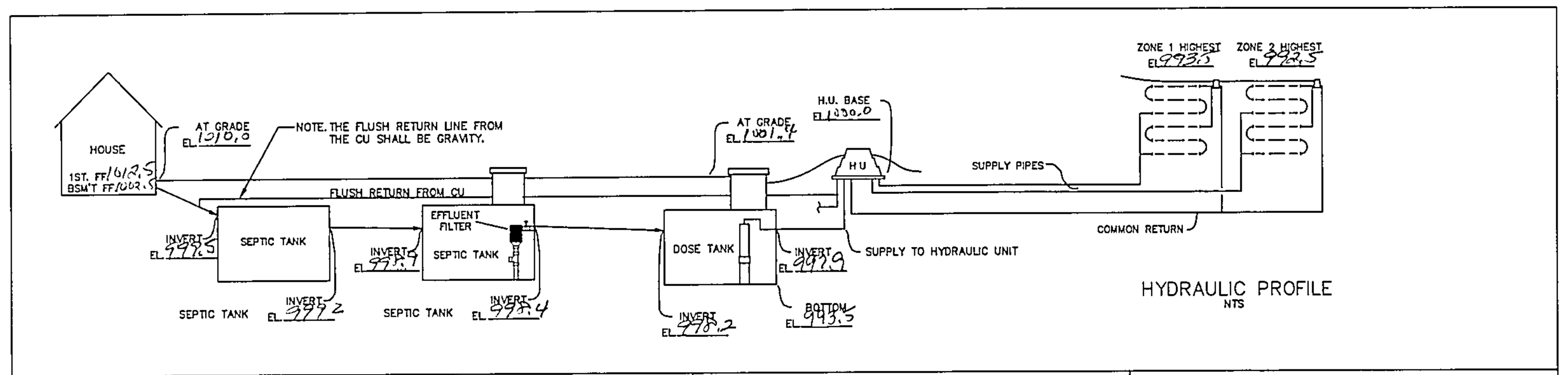

HYDRAULIC PROFILE
NTS

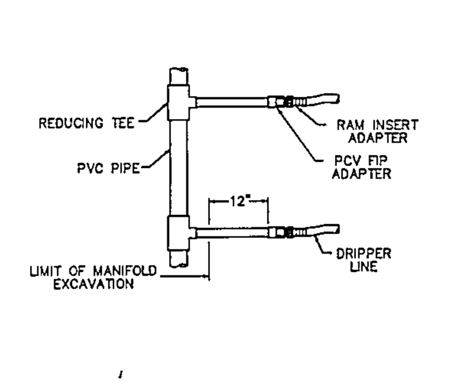

TYPICAL MANIFOLD CONNECTION
NTS

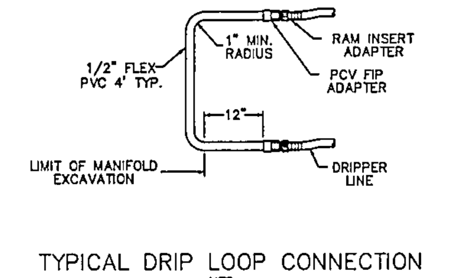

TYPICAL DRIP LOOP CONNECTION
NTS

AMERICAN MANUFACTURING CO.
5517 WELLINGTON RD. GAINESVILLE VA 20155; 703-754-0077

PROJECT NAME:	DR. BY: DATE:
	CK BY. DATE.
	APP. BY: DATE:
COUNTY	TITLE. Hydraulic Profile & Drip Detail
REV. FILE: SCALE:	SHEET OF

GENERAL NOTES – DRIP DISPOSAL

1. ALL INSTALLATION AND CONSTRUCTION TECHNIQUES SHALL CONFORM TO COUNTY CODES AND STATE BOARD OF HEALTH "SEWAGE HANDLING AND DISPOSAL REGULATIONS" PERTAINING TO ON SITE SEWAGE SYSTEMS AND THE PERMIT FOR THIS SITE.
2. THE INSTALLATION OF THIS SYSTEM SHALL BE IN ACCORDANCE WITH SPECIFICATIONS AND PROCEDURES AS SUPPLIED BY THE MANUFACTURER OF THE EQUIPMENT
3. ALL PVC PIPE AND FITTINGS SHALL BE PVC SCH 40 TYPE 1 RATED FOR PRESSURE APPLICATIONS. ALL GLUED JOINTS SHALL BE CLEANED AND PRIMED WITH PURPLE (DYED) PVC PRIMER PRIOR TO BEING GLUED.
4. ALL CUTTING OF PVC PIPE, FLEXIBLE PVC AND DRIPPER TUBING SHALL BE ACCOMPLISHED WITH PIPE CUTTERS APPROVED BY MANUFACTURER. NO SAWING OF PVC, FLEXIBLE PVC OR DRIPPER TUBING ALLOWED.
5. ALL PVC PIPE, FLEXIBLE PVC AND DRIPPER TUBING IN THE WORK AREA SHALL HAVE THE ENDS COVERED WITH DUCT TAPE TO PREVENT CONSTRUCTION DEBRIS FROM ENTERING THE PIPE. PRIOR TO GLUING ALL JOINTS SHALL BE INSPECTED FOR AND CLEARED OF ANY CONSTRUCTION DEBRIS.
6. NO WET WEATHER INSTALLATION IS PERMITTED
7. NO ACTIVITY ON DRAINFIELD AREA OTHER THAN MINIMUM REQUIRED TO INSTALL SYSTEM. DO NOT PARK EQUIPMENT, DRIVE LARGE EQUIPMENT OVER, OR STORE MATERIALS ON DRAINFIELD SITE.
8. HORIZONTAL SPACING BETWEEN DRIPPER LINES AND THE INSTALLATION DEPTH SHALL BE AS SPECIFIED.
9. THE BUILDING SEWER SHALL BE 4" SCH40 PVC WITH A MINIMUM SLOPE OF 1/4" PER FOOT THERE SHALL BE NO BENDS GREATER THAN 45 DEGREES. CLEANOUTS SHOULD BE PROVIDED EVERY 25 FEET. FOR CONSTRUCTION TECHNIQUES REFER TO THE "SEWAGE HANDLING AND DISPOSAL REGULATIONS".
10. IF TREES ARE TO BE REMOVED FROM SITE, CUT STUMPS FLUSH WITH GROUND. REMOVE BY HAND.
11. GRAVEL BASE UNDER CENTRAL CONTROL UNIT IS TO BE DRAINED VIA 2" PVC PIPE, SCREENED AT INLET AND OUTLET, DISCHARGE TO BE AT GRADE DOWN SLOPE (TO ENSURE DRAINAGE OF SURFACE WATER FROM UNIT)
12. THE CONTRACTOR SHALL BE CERTIFIED TO INSTALL THIS TYPE OF SYSTEM BY THE MANUFACTURER AND SHALL HOLD A PRE CONSTRUCTION MEETING WITH THE INDIVIDUALS RESPONSIBLE FOR SOIL EVALUATION, PERMITTING AND INSPECTIONS PRIOR TO SITE WORK BEGINNING TO INSURE PROTECTION OF THE SITE CONDITIONS AND TO ENSURE THE SYSTEM IS INSTALLED ACCORDING TO DESIGN.
13. IF SITE CONDITIONS ARE DETERMINED TO REQUIRE THE INSTALLATION OF THE SYSTEM TO DEVIATE FROM THESE PLANS, ALL SITE WORK SHALL STOP IMMEDIATELY AND THE DESIGNER SHALL BE NOTIFIED. ANY ONGOING WORK SHALL BE AT THE SOLE RESPONSIBILITY OF THE CONTRACTOR.
14. DRAINFIELD SUPPLY AND RETURN LINES TO BE INSTALLED AT ADEQUATE DEPTH TO PREVENT FREEZING.

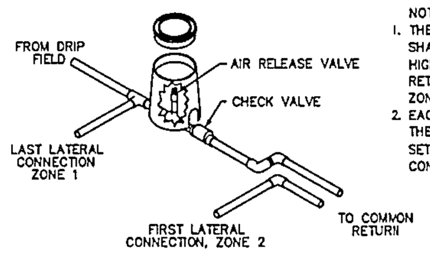

NOTE.
1. THE AIR RELEASE VALVE SHALL BE PLACED AT THE HIGHEST POINT ON THE RETURN LINE OF EACH ZONE.
2. EACH ZONE TO HAVE THE SAME VALVE BOX SETUP AND THEREAFTER CONNECTED.

AIR RELEASE & CHECK VALVE DETAIL
NTS

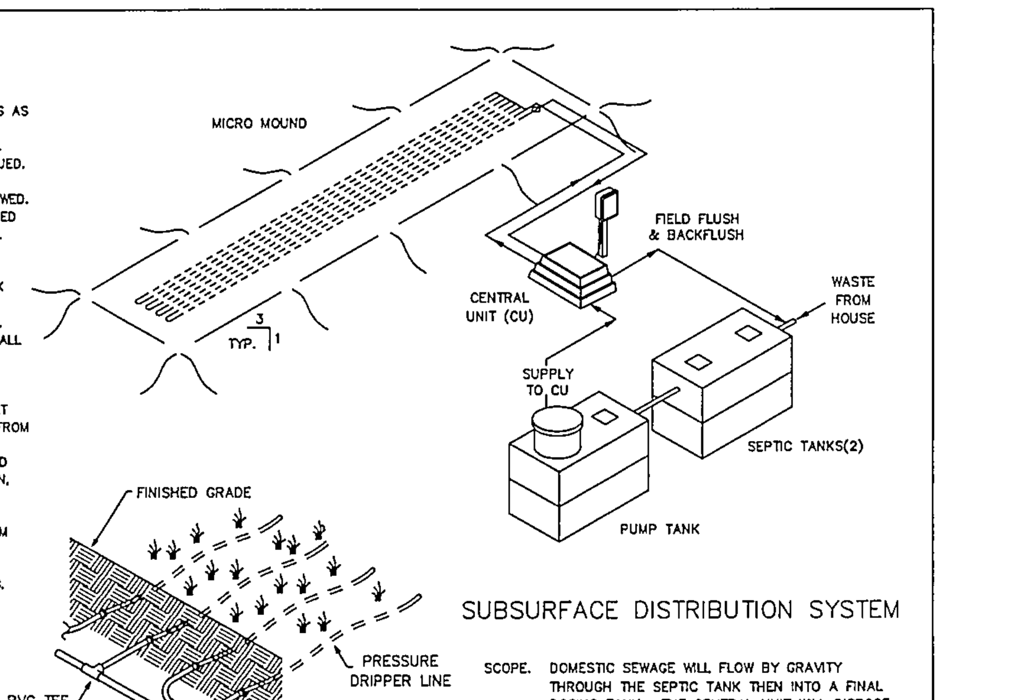

SUBSURFACE DISTRIBUTION SYSTEM

SCOPE. DOMESTIC SEWAGE WILL FLOW BY GRAVITY THROUGH THE SEPTIC TANK THEN INTO A FINAL DOSING TANK. THE CENTRAL UNIT WILL DISPOSE OF THE EFFLUENT BY ALTERNATELY DOSING MULTIPLE ZONES IN THE ABSORPTION AREA.

THE CENTRAL UNIT COMPRISES BOTH THE CONTROL AND THE HYDRAULIC UNITS

SHT 1 COVER SHEET
SHT 2 SITE PLAN
SHT 3 TREATMENT SCHEMATIC (MOUND DETAIL)
SHT 4 HYDRAULIC PROFILE & DRIP DETAIL
SHT 5 PUMP & CONTROL DETAIL
SHT 6 CALCULATION SHEET
SHT 7 PUMP CURVE

AMERICAN MANUFACTURING CO.
5517 WELLINGTON RD. GAINESVILLE VA 20155, 703-754-0077

PROJECT NAME:	DR. BY: DATE:
	CK. BY: DATE:
	APP. BY: DATE.
COUNTY:	TITLE: COVER SHEET
REV. FILE: SCALE:	SHEET OF

AERMOTOR MODEL: TEP20-50-115

1.25" DISCHARGE — 1/16" MAX. SOLIDS HANDLING
0.5 HORSEPOWER — 1 PHASE
115 VOLT — 60 HZ — MULTI-STAGE
12.0 AMPS — CENTRIFUGAL

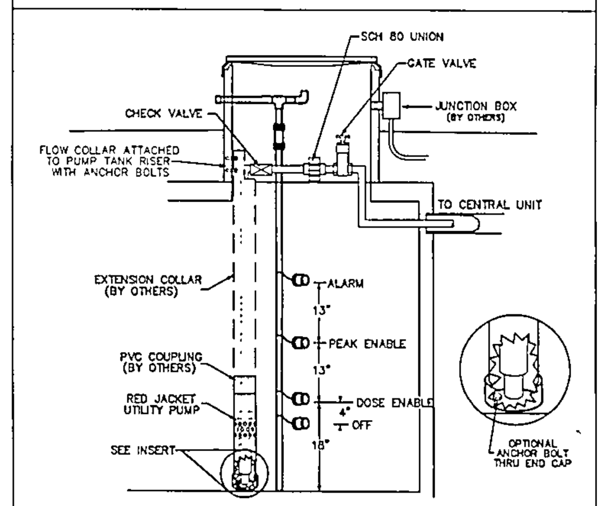

DOSING CHAMBER DETAIL
FOR 15 GPM AMERICAN LAMINAR FLOW COLLAR (LFC15)
NTS

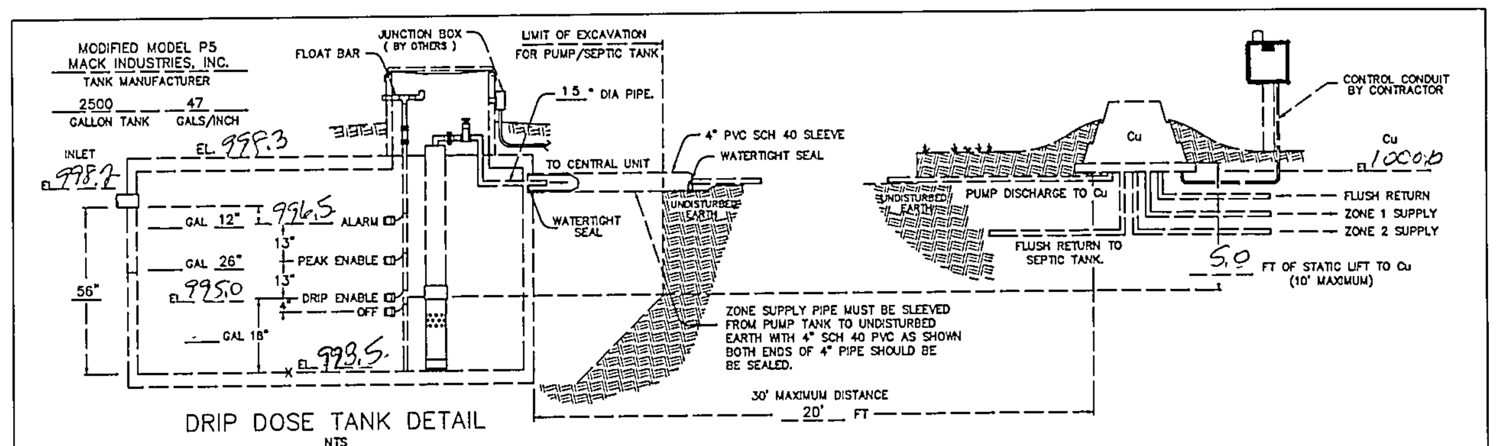

DRIP DOSE TANK DETAIL
NTS

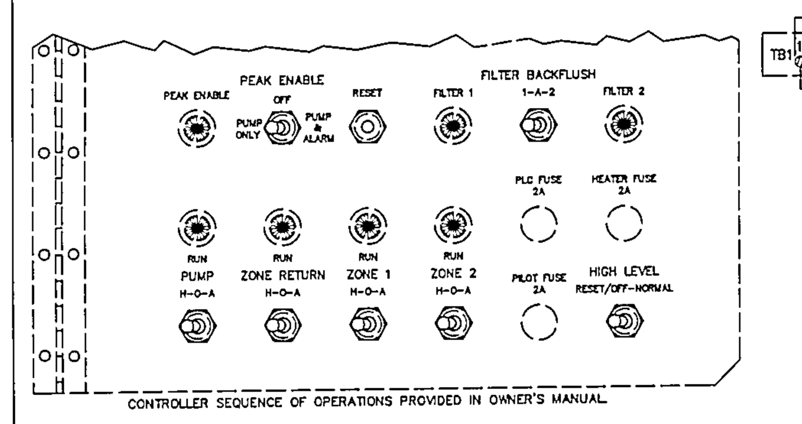

INNER DOOR LAYOUT

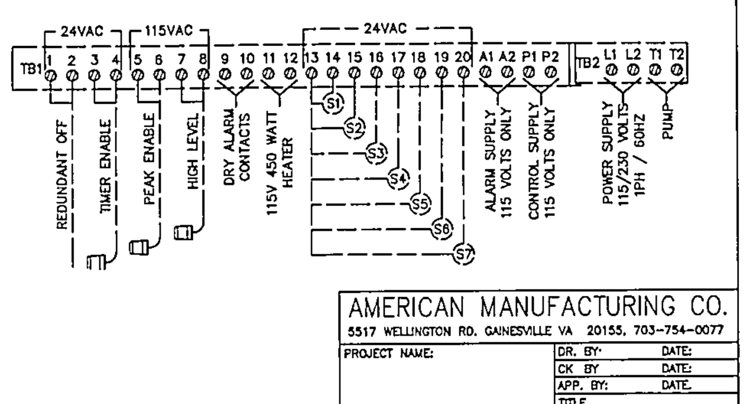

AMERICAN MANUFACTURING CO.
5517 WELLINGTON RD. GAINESVILLE VA 20155, 703-754-0077

PROJECT NAME:	DR. BY: DATE:
	CK BY DATE:
	APP. BY: DATE.
COUNTY	TITLE. Pump and Control Detail
REV. FILE. SCALE.	SHEET OF

NOTES:
1. PLOW ENTIRE 28'x 159' AREA OF DRAINFIELD (SAME WAY YOU WOULD A REGULAR MOUND).
2. ADD LAYER OF MOUND SAND INCORPORATING IT INTO/ONTO PLOWED BASAL AREA.
3. PLACE DRIP TUBING ON TOP OF SAND IN THE 5.5'x 134' UPPER SECTION OF DRAINFIELD.
4. ADD LAYER OF MOUND SAND OVER TOP OF DRIP TUBING IN THE 5.5'x 134' AREA
5. COVER ENTIRE 28'x 159' AREA OF DRAINFIELD WITH A MINIMUM COVER OF 6" OF TOPSOIL WITH A TURTLE-BACK GRADE FOR POSITIVE DRAINAGE.
6. AN AGGRESSIVE TURF COVER OVER ENTIRE 28'x 159' AREA IS RECOMMENDED (PREFERABLY SOD).

PLAN VIEW
NTS

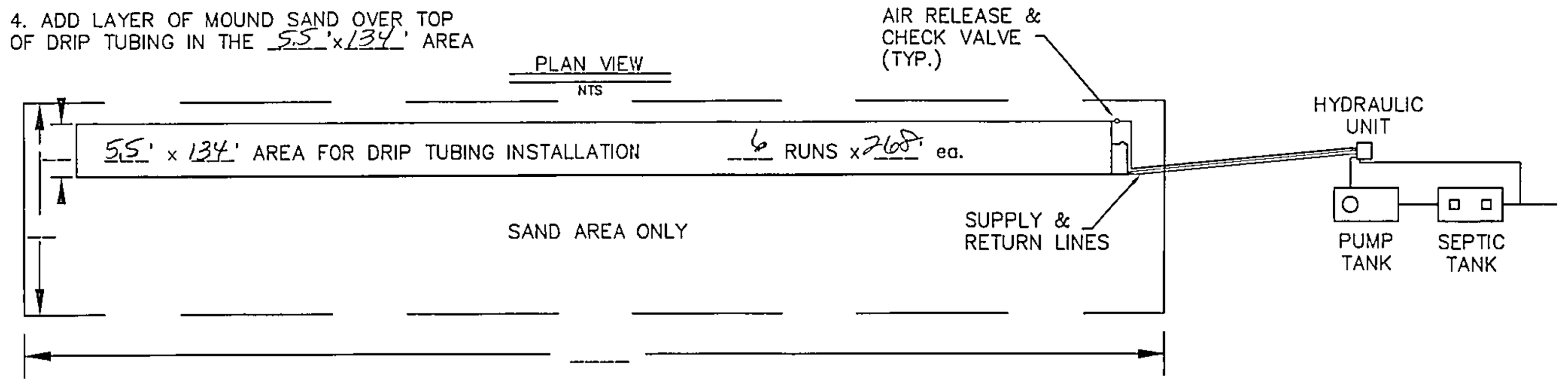

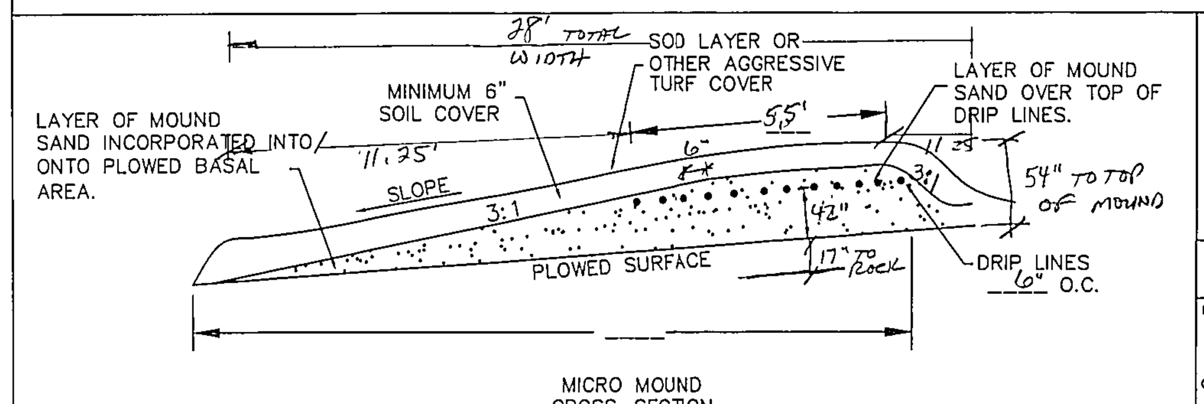

MICRO MOUND
CROSS–SECTION
NTS

BASAL AREA: 5.5'x 134' = 737 sqft
BASAL AREA LOADING: .17 gpd/sqft
SAND BED: 5.5 x 134' = 737 sqft
SAND BED LOADING: 0.44 gpd/sqft
DRIP TUBING: 6 x 268 = 1608 L.F.
ZONE 1: 3 runs x 268' = 804 L.F.
ZONE 2: 3 runs x 268' = 804 L.F.
LANDSCAPE LINEAR LOAD: 2.7 gpd/L.F.

AMERICAN MANUFACTURING COMPANY INC.
5517 WELLINGTON ROAD, GAINESVILLE VA 20155 PHONE : 703-754-0077

PROJECT NAME :	DRAFTER DATE
	CHECKED DATE
	APPROVED DATE
COUNTY .	TITLE . TREATMENT SCHEMATIC
DESIGNED BY:	
REVISION FILE: F\ACAD\PACK99\CARR SCALE : NTS	SHEET OF

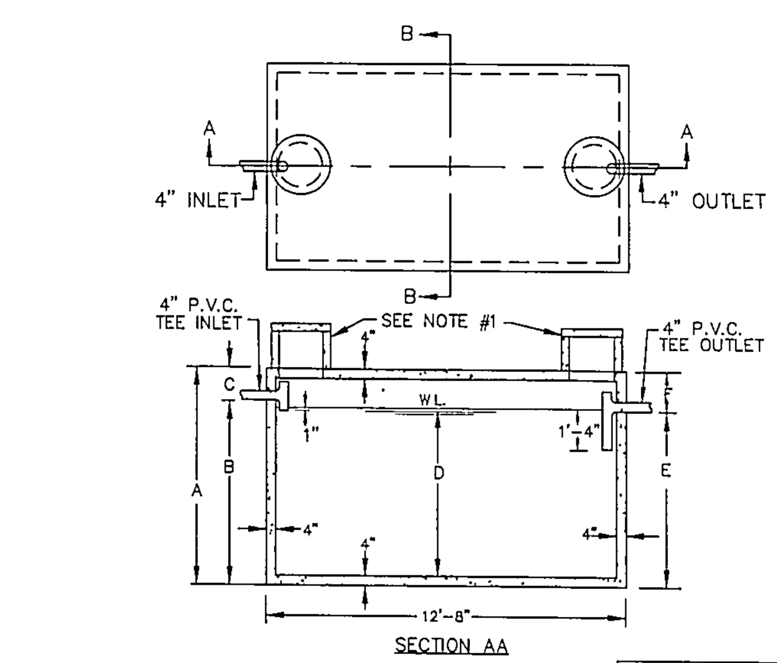

SECTION AA

SECTION BB

CAPACITY GAL.	A	B	C	D	E	F
2000	5'-6"	4'-2"	1'-4"	3'-7"	3'-11"	1'-7"
2250	5'-6"	4'-7"	0'-11"	4'-0"	4'-4"	1'-2"
2500	6'-4"	5'-0"	1'-4"	4'-5"	4'-9"	1'-7"
3000	7'-4"	5'-11"	1'-5"	5'-4"	5'-8"	1'-8"
3500	8'-4"	6'-9"	1'-7"	6'-2"	6'-6"	1'-10"
4000	9'-4"	7'-8"	1'-8"	7'-1"	7'-5"	1'-11"
5000	10'-4"	9'-5"	0'-11"	8'-10"	9'-2"	1'-2"

NOTES
A) 18" DIA. CONC. PLUG WITH HANDLE IS STANDARD EQUIPMENT.
B) 18" DIA. CONC. RISER, 15" OR 24" HIGH WITH CONC. LID IS OPTIONAL AT AN EXTRA CHARGE.

THE CONCRETE RISER ON THE OUTLET END WILL HAVE A MINIMUM 24" INSIDE DIAMETER.

2,000–5,000 GALLON SEPTIC TANKS

SCALE. NONE	APPROVED BY	DRAWN BY T A S
DATE. 9/23/74		REVISED
MACK INDUSTRIES, INC.		
VALLEY CITY OHIO 44280		DRAWING NUMBER P–5

"I, the undersigned hereby certify that this topography indicated by 6", 1' or 2' contours, and elevations shown hereon represent an actual field survey made by me on the 19th day of Jan, 2005 and that the elevations were taken at appropriate intervals and that as of that date they existed as indicated hereon."

Name Harry Jones — Reg. No. 7,343

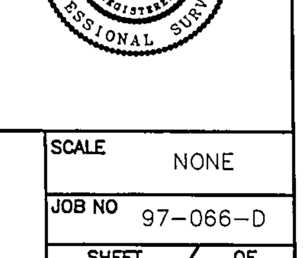

REV NO.	DESCRIPTION	DATE	BY	CHK'D
1	Revised per Stream Key	7-21-05	HJ	HJ
2	Revised per L.C. Health Dept	9-1-05	HJ	HJ
3	" " " " "	9-7-05	HJ	HJ
4	" " " " "	9-9-05	HJ	HJ

BABCOCK, JONES AND ASSOCIATES, INC
CIVIL ENGINEERS – SURVEYORS – LAND PLANNERS
PAINESVILLE OHIO 44077

DATE	1/22/05
DESIGN BY	H.J.
DRAWN BY	B.P.
APPROVED BY	H.J.
CREW CHIEF	E.H.

SITE PLAN
FOR
DAVID KNOTT

LITTLE MOUNTAIN ROAD (P.P.#10A–22E–14)
CONCORD TOWNSHIP — LAKE COUNTY — STATE OF OHIO

SCALE	NONE
JOB NO	97–066–D
SHEET 2	OF 2