Moon Beam Lane 60'

CONCORD TOWNSHIP ZONING OFFICE
Zoning Permit # 0907-13062
Date Issued 4/16/07
Subject to Approval By:
☐ Lake Co. Engineer/Storm Water Mgmt.
☐ Lake Co. Utilities Dept.
☐ Lake Co. Soil + Water District
☐ Lake Co. Health District
☐ Lake Co. Building Dept.

Temporary Seeding Specifications

Seeding Dates	Species	Lb. / 1000sqft	Per Acre
March 1 to August 15	Oats	3	4 bushel
	Tal Fescue	1	40 lb.
	Annual Ryegrass	1	40 lb.
	Perennial Ryegrass	1	40 lb.
	Tal Fescue	1	40 lb.
	Annual Ryegrass	1	40 lb.
August 16 to November 1	Rye	1	2 bushel
	Tal Fescue	1	40 lb.
	Annual Ryegrass	1	40 lb.
	Wheat	1	40 lb.
	Tal Fescue	1	40 lb.
	Annual Ryegrass	1	40 lb.
	Perennial Ryegrass	1	40 lb.
	Tal Fescue	1	40 lb.
	Annual Ryegrass	1	40 lb.
November 1 to Spring Seeding	Use mulch only, sodding practices or dormant seeding		

Note: other approved seed species may be substituted.

GRAPHIC SCALE
20 0 10 20 40 80
(IN FEET)
1 inch = 20 ft.

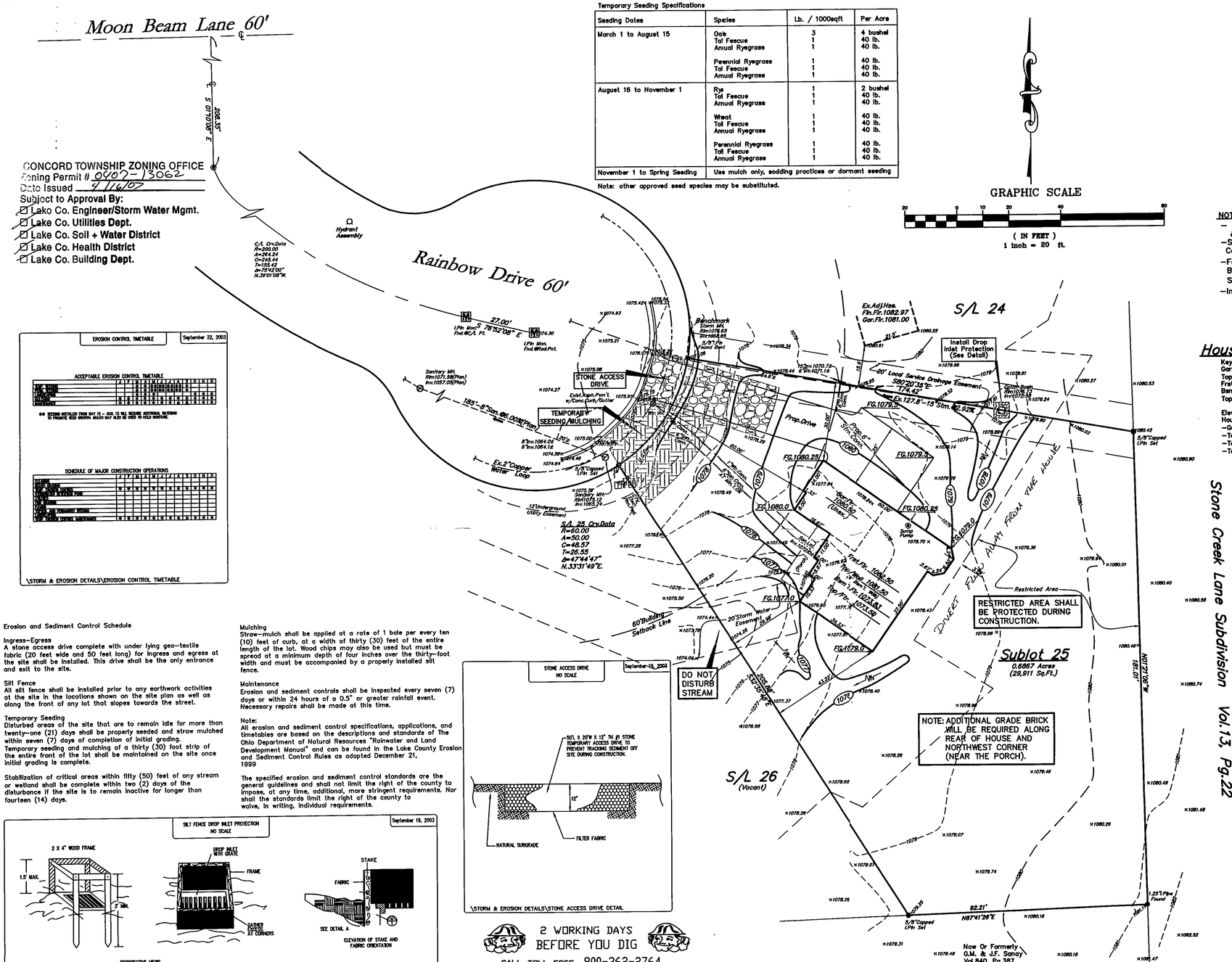

NOTE:
- Contractor To Verify Location & Depth Of Laterals;
- See Architect Plans For Complete House Dimensions;
- Footer Drains and Downspouts To Be Connected To Existing Storm Connection.
- Install Silt Fence As Required.

SILT FENCE DETAIL
NO SCALE
September 19, 2003

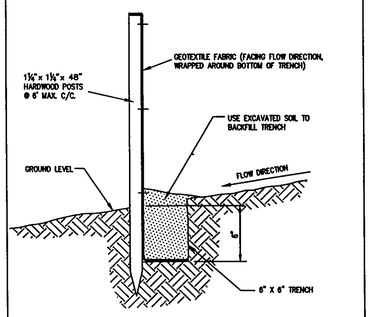

TYPICAL CROSS SECTION

\STORM & EROSION DETAILS\SILT FENCE DETAIL

House Grading Summary

Key:
Gar.Flr.=Garage Floor Elevation At Garage Door
Top/Wall=Top Of Wall Elevation
Frst.Flr.=First Floor Elevation
Bsmt.Flr.=Basement Floor Elevation
Top/Flr.=Top Of Footer Elevation

Elevations Used To Establish House Floor Grades:
- Gar.Flr.+1'0"=Top Of Block
- Top Of Wall + 1'-0"=Frst.Flr.
- Top Of Wall - 8'-0"=Top/Flr.
- Top Of Flr.+4"(0.33')=Bsmt.Flr.

ESTIMATED IMPERVIOUS AREA
HOUSE: 0.06Ac.
DRIVE: 0.05Ac.
TOTAL: 0.11Ac.

I, THE UNDERSIGNED, HEREBY CERTIFY THAT THIS TOPOGRAPHY, INDICATED BY 6", 1', OR 2' CONTOURS, AND ELEVATIONS SHOWN HEREON, REPRESENT AN ACTUAL FIELD SURVEY MADE BY ME ON THE 11th. DAY OF APRIL, 2007, AND THAT THE ELEVATIONS WERE TAKEN AT APPROPRIATE INTERVALS AND THAT AS OF THAT DATE, THEY EXISTED AS INDICATED HEREON.

Dustin R. Keeney, P.E.65515

Site & Grade Hse. 4-12-07 G.S.V.

EROSION CONTROL TIMETABLE
September 22, 2003

ACCEPTABLE EROSION CONTROL TIMETABLE

	J	F	M	A	M	J	J	A	S	O	N	D
SILT FENCE												
TOP SOIL												
SEEDING												
MULCHING												
MAINTENANCE												

** SEEDING INSTALLED FROM MAY 15 - AUG. 15 WILL REQUIRE ADDITIONAL WATERING TO PROMOTE SEED GROWTH. MULCH MAY ALSO BE USED TO KEEP MOISTURE.

SCHEDULE OF MAJOR CONSTRUCTION OPERATIONS

	J	F	M	A	M	J	J	A	S	O	N	D
CLEARING												
ROUGH GRADING												
UTILITY INSTALLATION												
CUT & FILL OVER LOT FOOD												
SEEDING												
MULCHING												
SILT FENCE PERMANENT SEEDING												
MAINTENANCE												
FINAL GRADING												
SILT FENCE REMOVAL												

\STORM & EROSION DETAILS\EROSION CONTROL TIMETABLE

Erosion and Sediment Control Schedule

Ingress-Egress
A stone access drive complete with under lying geo-textile fabric (20 feet wide and 50 feet long) for ingress and egress at the site shall be installed. This drive shall be the only entrance and exit to the site.

Silt Fence
All silt fence shall be installed prior to any earthwork activities at the site in the locations shown on the site plan as well as along the front of any lot that slopes towards the street.

Temporary Seeding
Disturbed areas of the site that are to remain idle for more than twenty-one (21) days shall be properly seeded and straw mulched within seven (7) days of completion of initial grading.
Temporary seeding and mulching of a thirty (30) foot strip of the entire front of the lot shall be maintained on the site once initial grading is complete.

Stabilization of critical areas within fifty (50) feet of any stream or wetland shall be complete within two (2) days of the disturbance if the site is to remain inactive for longer than fourteen (14) days.

Mulching
Straw-mulch shall be applied at a rate of 1 bale per every ten (10) feet of curb, at a width of thirty (30) feet of the entire length of the lot. Wood chips may also be used but must be spread at a minimum depth of four inches over the thirty-foot width and must be accompanied by a properly installed silt fence.

Maintenance
Erosion and sediment controls shall be inspected every seven (7) days or within 24 hours of a 0.5" or greater rainfall event. Necessary repairs shall be made at this time.

Note:
All erosion and sediment control specifications, applications, and timetables are based on the descriptions and standards of The Ohio Department of Natural Resources "Rainwater and Land Development Manual" and can be found in the Lake County Erosion and Sediment Control Rules as adopted December 21, 1999

The specified erosion and sediment control standards are the general guidelines and shall not limit the right of the county to impose, at any time, additional, more stringent requirements. Nor shall the standards limit the right of the county to waive, in writing, individual requirements.

STONE ACCESS DRIVE
NO SCALE
September 19, 2003

\STORM & EROSION DETAILS\STONE ACCESS DRIVE DETAIL

SILT FENCE DROP INLET PROTECTION
NO SCALE
September 19, 2003

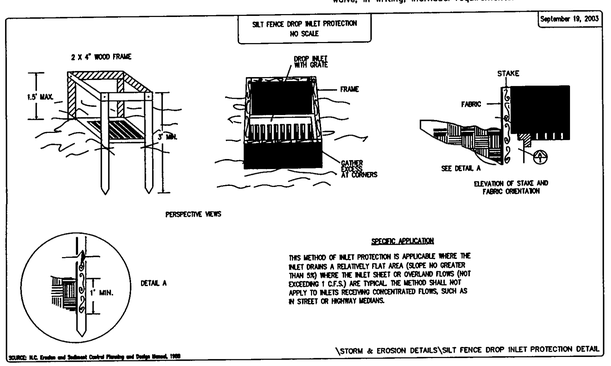

SPECIFIC APPLICATION

THIS METHOD OF INLET PROTECTION IS APPLICABLE WHERE THE INLET DRAINS A RELATIVELY FLAT AREA (SLOPE NO GREATER THAN 5%) WHERE THE INLET SHEET OR OVERLAND FLOWS (NOT EXCEEDING 1 C.F.S.) ARE TYPICAL. THE METHOD SHALL NOT APPLY TO INLETS RECEIVING CONCENTRATED FLOWS, SUCH AS IN STREET OR HIGHWAY MEDIANS.

SOURCE: N.C. Erosion and Sediment Control Planning and Design Manual, 1988

\STORM & EROSION DETAILS\SILT FENCE DROP INLET PROTECTION DETAIL

2 WORKING DAYS BEFORE YOU DIG
CALL TOLL FREE 800-362-2764
OHIO UTILITIES PROTECTION SERVICE
NON-MEMBERS MUST BE CALLED DIRECT

EXISTING UNDERGROUND UTILITIES NOTE:
THE SIZE AND LOCATION, BOTH HORIZONTAL AND VERTICAL OF THE UNDERGROUND UTILITIES SHOWN HEREON, HAVE BEEN OBTAINED BY A SEARCH OF AVAILABLE RECORDS. VERIFICATION BY FIELD OBSERVATION HAS BEEN CONDUCTED WHERE PRACTICAL. HOWEVER, POLARIS ENGINEERING & SURVEYING, INC. DOES NOT GUARANTEE THE COMPLETENESS NOR ACCURACY THEREOF.

NOTE: THIS SURVEY SUBJECT TO CHANGE UPON RECEIPT OF ANY ADDITIONAL AVAILABLE UNDERGROUND UTILITY INFORMATION.

Prepared For:
McCullough Builders
2736 North Ridge Rd.,Suite212
Painesville, Ohio 44077
(440)350-9277

polaris Engineering & Surveying
POLARIS ENGINEERING & SURVEYING, INC.
34600 CHARDON ROAD - SUITE D
WILLOUGHBY HILLS, OHIO 44094
(440) 944-4433 (440) 944-3722 (Fax)
www.polaris-es.com

DESIGN CERTIFICATION
THIS PLAN WAS PREPARED BY ME, AND IS CORRECT TO THE BEST OF MY KNOWLEDGE AND BELIEF.
NAME 4/12/07 DATE

BENCHMARK:
B.M. = T.B.M Set On Rim Of Ex.Storm MH.
Located As Noted
Elevation 1076.65(Per 'LDC.Inc')

STATE OF OHIO DUSTIN R. KEENEY E-65515 REGISTERED PROFESSIONAL ENGINEER
STATE SEAL

"AS-BUILT" CERTIFICATION
I HEREBY CERTIFY THAT THE CIRCLED INFORMATION IS EXISTING AS OBTAINED ON THE SITE _____ AND IS CORRECT TO THE BEST OF MY KNOWLEDGE AND BELIEF.
NAME DATE

SUBLOT 25
Nature Preserve South
(Volume 49, Page 24)
Concord Twp., Lake County, Ohio

CONTRACT No. 07052
DATE: 4/12/07
SCALE: HOR. 1"=20'
VERT. N/A
FILENAME: Sublot25 South.dwg

Stormwater Management Plan
Approved as shown and/or noted
JAMES R. GILLS, P.E.
County Drainage Engineer
By J.S. Date 4/19/07