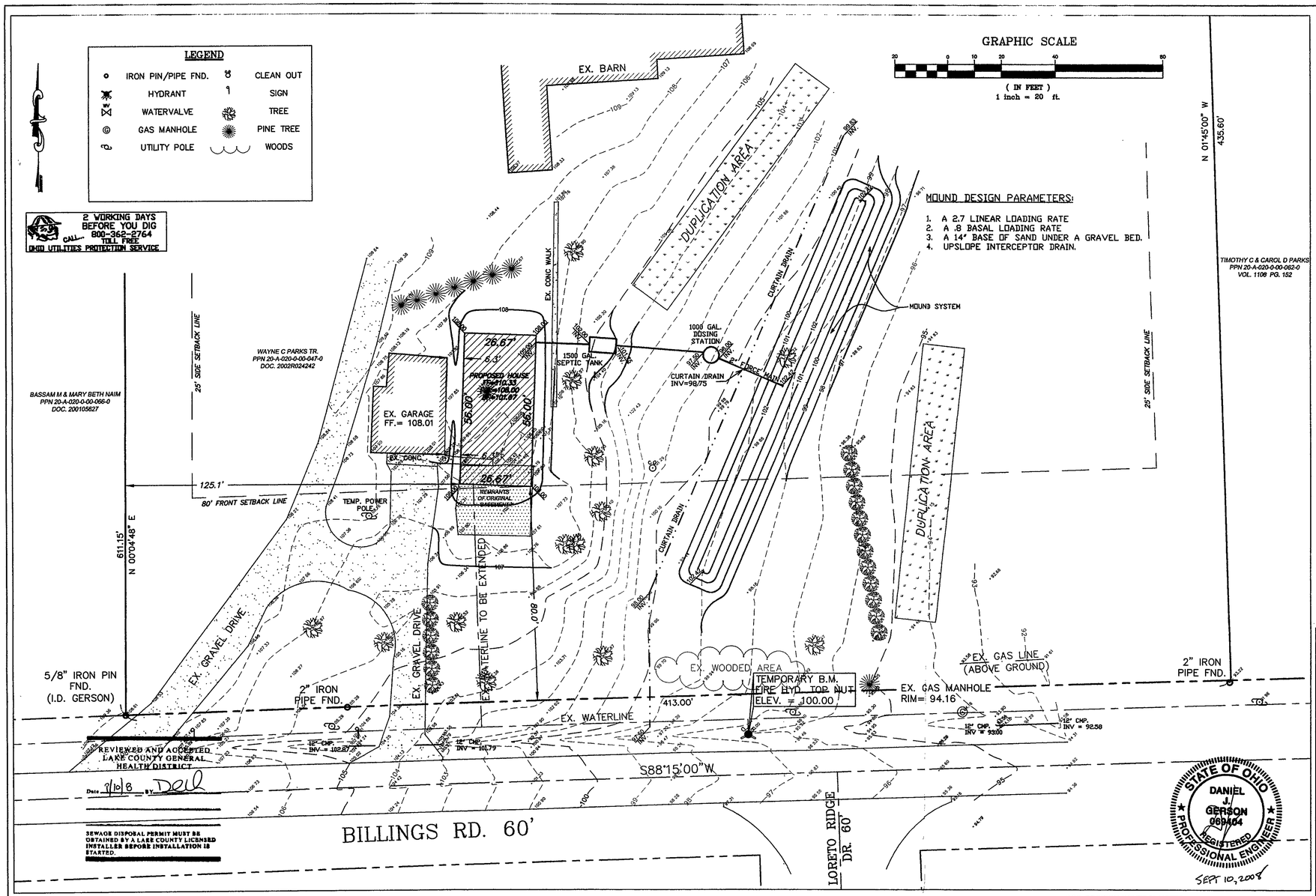

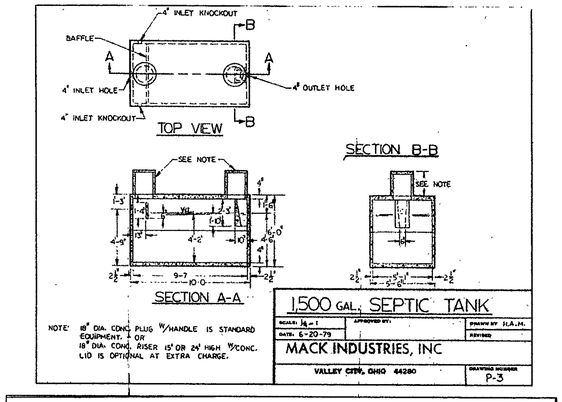

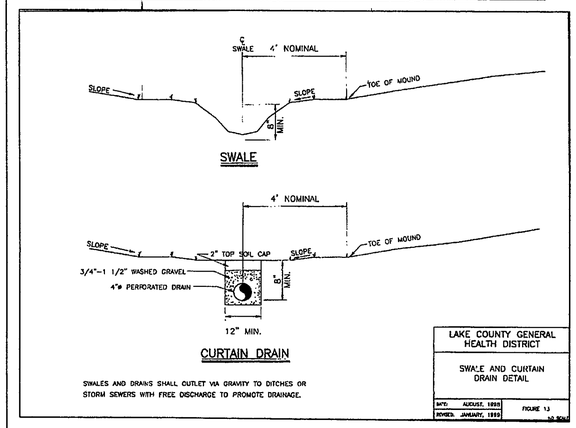

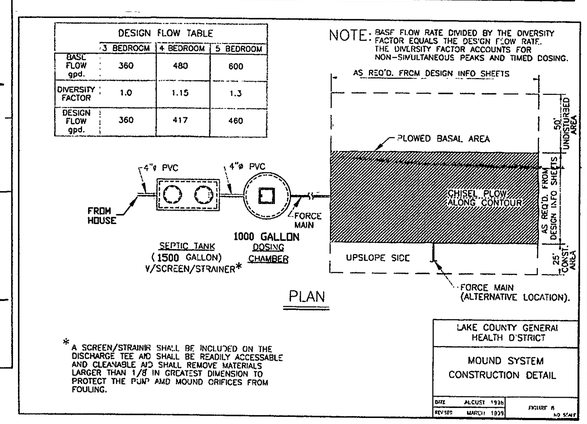

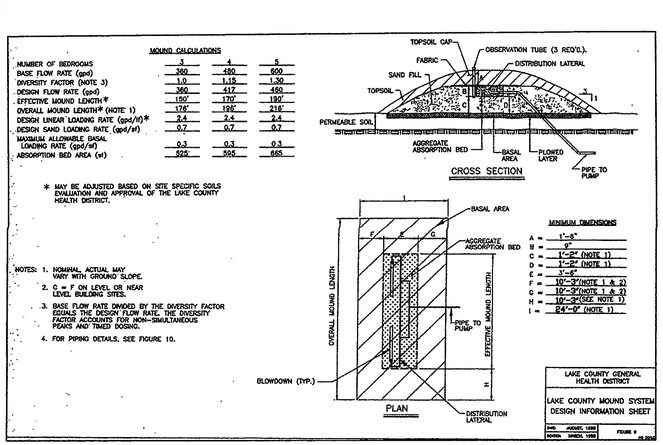

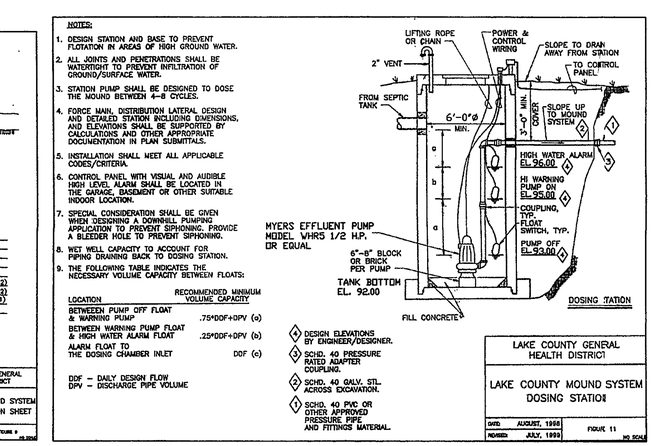

SOIL EROSION CONTROL NOTES

1) USE SILT FENCE AROUND ALL DISTURBED AREAS
2) SEED AND MULCH ALL DISTURBED AREAS AS PER ODOT 659

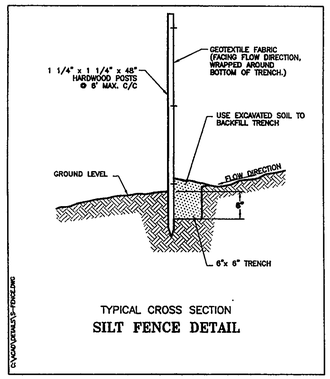

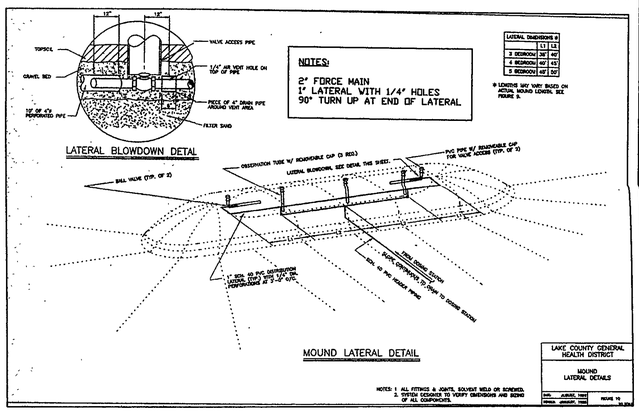

WILLIAM R. GRAY ASSOCIATES, INC.
9472 HAMILTON DRIVE, MENTOR, OHIO 44060
(440) 350-0861

Stormwater Management Plan
Approved as shown or noted
JAMES R. GILLILAND, P.E.
County Drainage Engineer
By L.S. Date 9/22/08

REVISIONS	DATE
HEALTH DEPT. COMMENTS	9/3/08

TITLE: SITE PLAN
8743 BILLINGS RD.
CITY OF KIRTLAND, LAKE COUNTY, OHIO

DATE 8-6-08 | DRAWN BY KLL | CHECKED BY DJG | SCALE 1" = 20'

TIM PARKS
8787 BILLINGS RD.
KIRTLAND, OH 44094

SHEET NO.

DWG. NO.