Drip Design Soil Data

Client: 20TH. CENTURY CONSTRUCTION

Address: 10178 QUARRY LANE

KIRTLAND, OH 44094

Soils By: FLOYD McCLEARY

Soil Boring #: 2&4 8" Limiting Layer

Basal Loading Rate

Texture: SIL Shape: GR Grade: 2 = 0.8 gal/day/sq.ft. (BOD ∠ 30 MG/L)

Linear Loading Rate

Grade= 0-4% Infiltration Distance= 8"-12"= 2.7 gal/day/ft.

4 Bedroom home = (4)(120 gpd) = 480 gpd
Actual linear loading rate 2.40 gal/day/ft

Basal Area Required (Design)

480 gpd= 600 ft² min basal area
0.8

Landscape Linear Load (Design)

480 gpd= 178 feet total minimum length required
200 feet Provided

Minimum Width of Basal Area (Design)

600 ft²= 3.00 ft.
200

Basal Area Provided (200)(20) = 4000 ft²→
600 ft² required
Actual Basal Loading Rate 0.12 gal/day/ft²

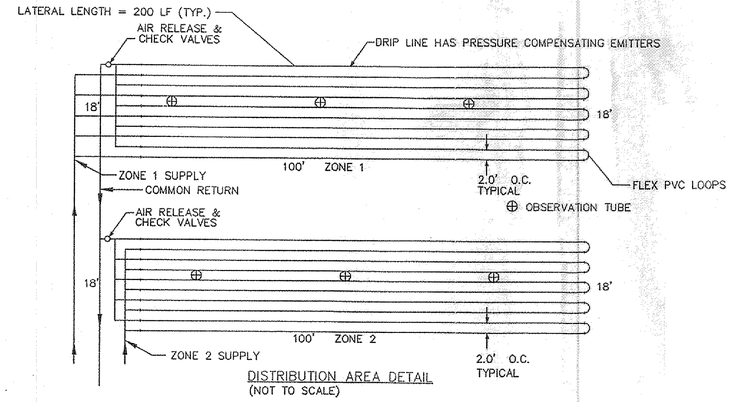

DISTRIBUTION AREA DETAIL
(NOT TO SCALE)

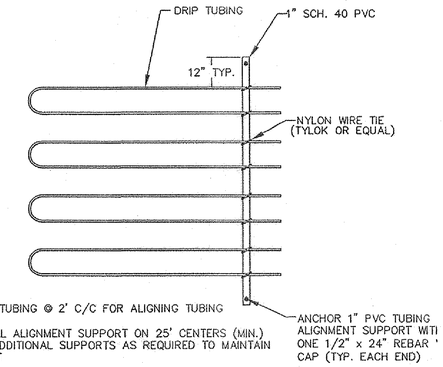

1.) MARK TUBING @ 2' C/C FOR ALIGNING TUBING

2.) INSTALL ALIGNMENT SUPPORT ON 25' CENTERS (MIN.) INSTALL ADDITIONAL SUPPORTS AS REQUIRED TO MAINTAIN ALIGNMENT

TUBING ALIGNMENT SUPPORT DETAIL
(NO SCALE)

TYPICAL INTERCEPTOR DRAIN CROSS SECTION

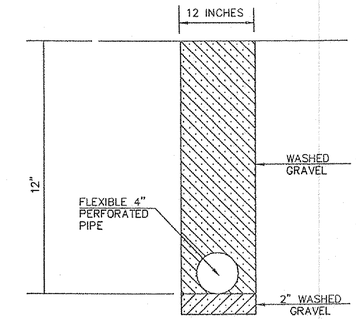

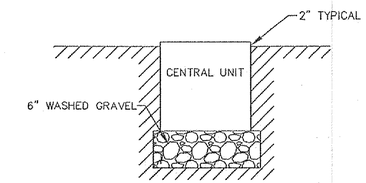

CENTRAL UNIT BEDDING DETAIL
(NOT TO SCALE)

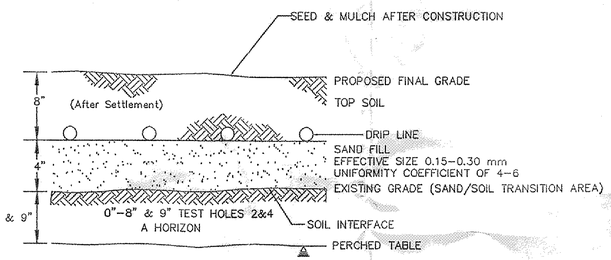

SOIL PROFILE DETAIL

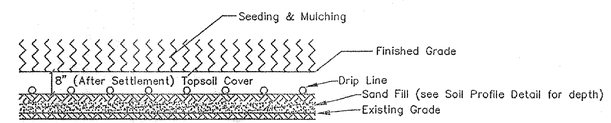

DRIPLINE INSTALLATION WITH SAND FILL

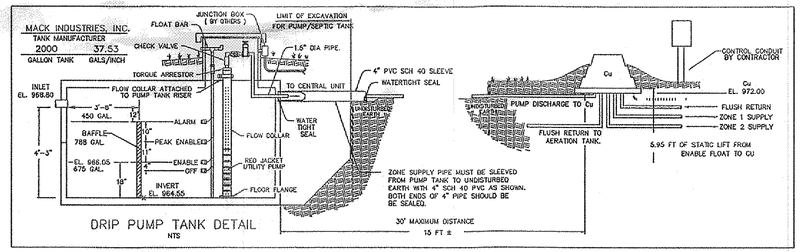

DRIP PUMP TANK DETAIL
NTS

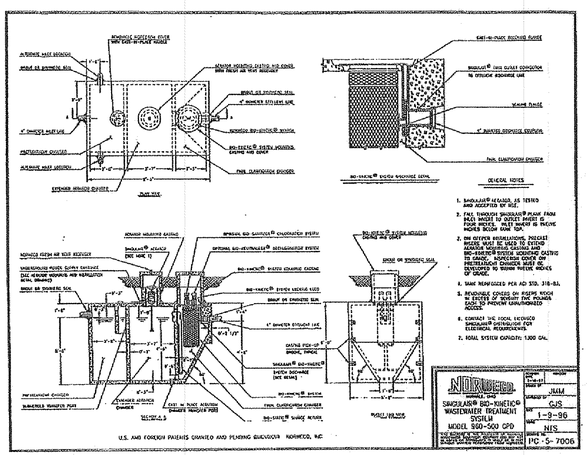

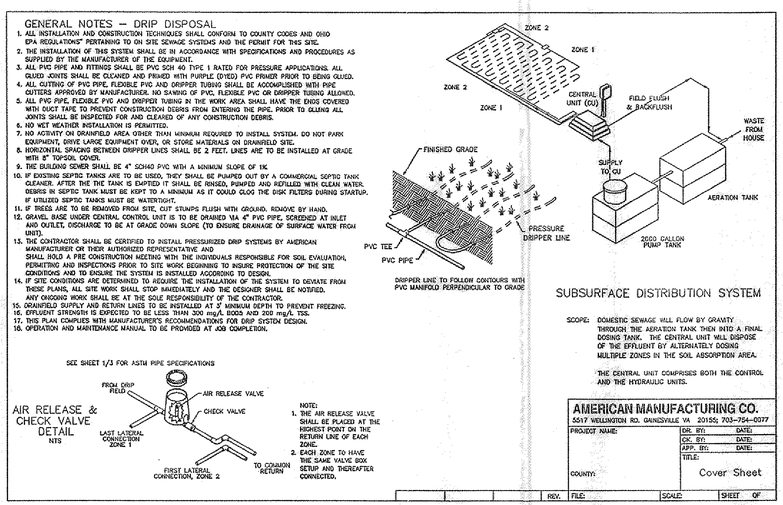

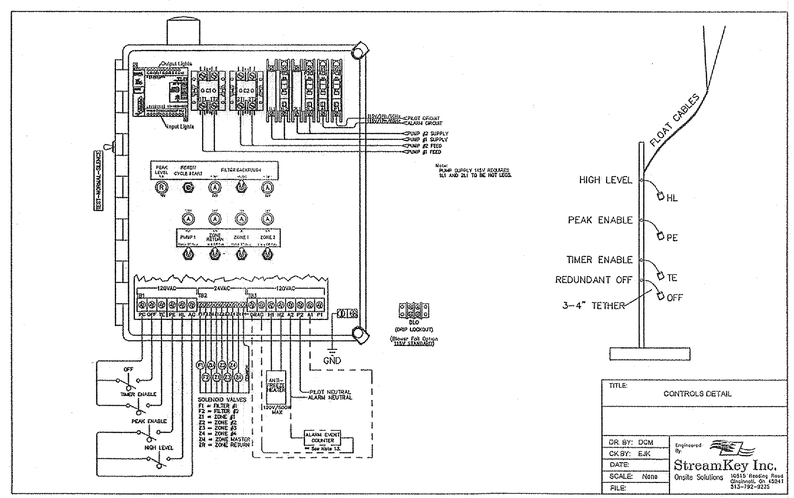

Revisions:
1
2
3
4
5
6
7

20TH CENTURY CONSTRUCTION
S/L 11
CHAPIN LEDGES SUBDIVISION
KIRTLAND - COUNTY OF LAKE, OHIO

GUTOSKEY & ASSOCIATES INC.
Civil Engineers, Surveyors and Land Planners
12078 MINN ROAD, SUITE 1
CHAGRIN FALLS, OHIO 44023
Tel (440) 543-6900
Fax (440) 543-7176

NOTES & DETAILS

Date: MAY, 2010
Scale: Hor. 1"=30'
Vert. 1"=5'
Drawn By: G.A.
Checked By: J.G.
F.B. #:

Sheet 2 Of 3

CONTRACT No.
10-2535