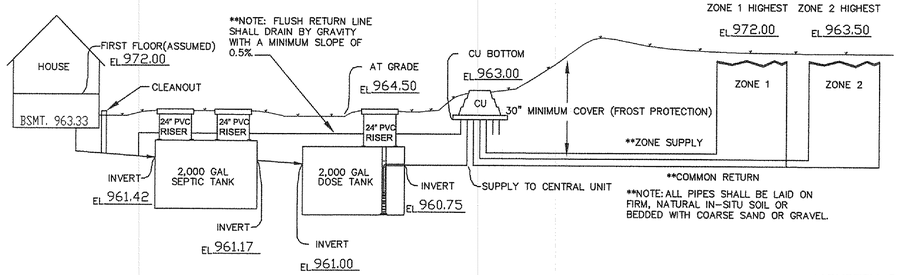

HYDRAULIC PROFILE
NOT INTENDED TO SHOW COMPONENT DETAILS
(NOT TO SCALE)

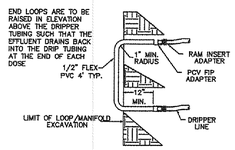

TYPICAL DRIP LOOP CONNECTION
NTS

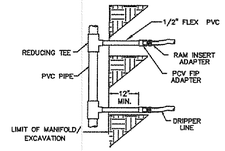

TYPICAL MANIFOLD CONNECTION
NTS

**IMPORTANT TANK NOTES

THE INSTALLING CONTRACTOR IS RESPONSIBLE FOR PROVIDING WATERPROOF TANKS. BOTH THE SEPTIC TANK AND THE DOSING TANK SHALL BE FITTED WITH FLEXIBLE BOOTS ON THE INLETS AND OUTLETS. TANK OPENINGS ARE TO HAVE ADAPTER RINGS CAST IN THE TOP TO ACCEPT PVC RISERS. TANKS SHALL BE WATER TIGHT PER OHIO ADMINISTRATIVE CODE CHAPTER 3701-29 "SEWAGE TREATMENT SYSTEM RULES".

**SYSTEM DESCRIPTION

DOMESTIC SEWAGE WILL FLOW BY GRAVITY THROUGH THE SEPTIC TANK THEN INTO A FINAL DOSING TANK. THE CENTRAL UNIT WILL DISPOSE OF THE EFFLUENT BY ALTERNATELY DOSING MULTIPLE ZONES IN THE ABSORPTION AREA. THE CENTRAL UNIT COMPRISES BOTH THE CONTROLS AND THE HYDRAULIC UNIT. THE HYDRAULIC UNIT INCLUDES WASTEWATER FILTRATION, FLOW MEASUREMENT AND VALVING TO ISOLATE FLOWS TO ZONES.

NOTE:
1. THE AIR RELEASE VALVE SHALL BE PLACED AT THE HIGHEST POINT ON THE RETURN LINE OF EACH ZONE.
2. EACH ZONE TO HAVE THE SAME VALVE BOX SETUP AND THEREAFTER CONNECTED.

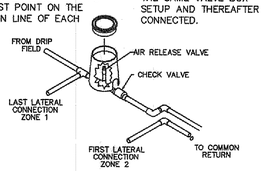

AIR RELEASE & CHECK VALVE DETAIL

TITLE: HYDRAULIC PROFILE & TYPICAL DRIP DETAILS MOUND INSTALLATION	
Homeowner Location County, Ohio	
DR. BY: RKM	Engineered By: StreamKey Engineered Plumbing & Wastewater Solutions 10515 Reading Road Cincinnati, Oh 45241 513-792-1221
CK BY: EJK	
DATE:	
SCALE: None	
SHEET NO.	FILE:

Appendix 1, Section C, 2

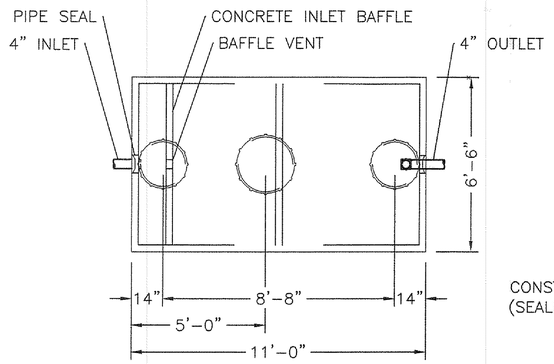

PLAN VIEW

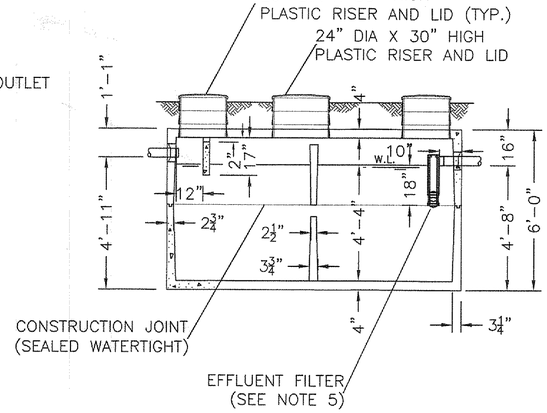

SECTION VIEW

NOTES:

1. REINFORCED PRECAST CONCRETE TO HAVE A COMPRESSIVE STRENGTH OF 5000 PSI @ 28 DAYS.
2. PRECAST CONCRETE TANK SHALL MEET OR EXCEED SPECIFICATIONS AS SET BY O.A.C. RULE 3701-293-11.
3. CONCRETE JOINT SEALANT CONFORMS TO ASTM C-990.
4. TANK SEALS CONFORM TO ASTM C-923.
5. EFFLUENT FILTER RETAINS SOLIDS GREATER THAN 1/16" AND CONFORMS TO ASTM C-1227.
6. STAMP OR LABEL TOP OF TANK AS FOLLOWS:
   MACK INDUSTRIES LOGO
   2000 GAL. TANK CAPACITY
   DATE OF MANUFACTURE

STATE APPROVAL PENDING

DUAL COMPARTMENT 2000 GALLON SEPTIC TANK

O.D.H. 2007 COMPLIANCE, OAC RULE 3701-29-11

DRAWN BY: CJ	SCALE: 1/4"=1'-0"	DRAWING NO.:
DATE: 4/5/07	REV:	D 1000 GAL

MACK INDUSTRIES, INC.
201 COLUMBIA ROAD, VALLEY CITY, OHIO 44280 (330) 483-3111

THIS DRAWING IS THE PROPERTY OF MACK INDUSTRIES, INC., AND IT OR THE TECHNOLOGY CONTAINED HEREIN MAY NOT BE REPRODUCED NOR USED EXCEPT AS ORIGINALLY INTENDED WITHOUT THE EXPRESSED CONSENT OF MACK INDUSTRIES, INC.

FORM C:\SC12\LIBRARY\FORMS\24X36JM.DWG

AMERICAN MANUFACTURING COMPANY

SEPTIC DRIP CALCULATION SHEET

Job Name: B.R. KNEZ CONSTRUCTION, INC. Location: Kirtland, Ohio
Project No.: 10010-005 Date: 4/28/2010

1 480 GALLONS PER DAY 4 NO. OF BEDROOMS
2
3 200 FT. (Lengt 15 FT. (Width) AREA FOR DISPOSAL LAYO 3000 FT2
4 2 ZONES
5 2000 TOTAL DRIPPER LINE PROVIDED (Zone 1 + Zone 2)
6 2000 SEPTIC TANK SIZE (gallons)
7 2000 DOSING TANK SIZE (gallons)
8 36.4 GALLONS PER INCH IN DOSING TANK (Provided From Manufacturer)

9 ZONE ONE
10 1500 TOTAL ABSORPTION AREA (FT2)
11 1000 LINEAR FEET OF DRIP TUBING ((Total Tubing for Zone 1)
12 200 LONGEST LATERAL LENGTH (FT) 45.5 Minimum Dose Volume (Gal/Dose)
13 5.08 DOSING FLOW RATE (GPM) (Length of tubing /2) x (0.61 Gal/Hft) / (60 Min/Hr.)
14 5 NO. RETURN FIELD FLUSH CONNECTIONS (#/zone)
15 8.00 FIELD FLUSH FLOW RATE (GPM/(1.6 gpm/Connection) x (no. of field flush connections)
16 13.08 TOTAL FLOW REQUIRED (GPM)(Dosing flow rate + Field flushing flow rate)

17 ZONE TWO
18 1500 TOTAL ABSORPTION AREA (FT2)
19 1000 LINEAR FEET OF DRIP TUBING ((Total Tubing for Zone 2)
20 200 LONGEST LATERAL LENGTH (FT) 45.5 Minimum Dose Volume (Gal/Dose)
21 5.08 DOSING FLOW RATE (GPM) (Length of tubing /2) x (0.61 Gal/Hft) / (60 Min/Hr.)
22 5 NO. RETURN FIELD FLUSH CONNECTIONS (#/zone)
23 8.00 FIELD FLUSH FLOW RATE (GPM/(1.6 gpm/Connection) x (no. of field flush connections)
24 13.08 TOTAL FLOW REQUIRED (GPM)(Dosing flow rate + Field flushing flow rate)

25 14 MAXIMUM DESIGN TOTAL FLUSHING FLOW (GPM)
26 13 FEET OF HEAD LOSS FROM HYDRAULIC UNIT (TDH) (Basec (Chart 2A)

27 HYDRAULIC UNIT SUPPLY LINE
28 1.5" PIPE DIAMETER (inches) (From pump to Hydraulic Unit)
29 15 LENGTH SUPPLY PIPE (FT) (From pump to Hydraulic Unit)
30 6 FEET OF STATIC LIFT (From pump to Hydraulic Unit)
31 8 TOTAL FEET HEAD LOSS IN LINE (Dynamic Head Loss + #30)

32 FORCE MAIN SUPPLY LINE PIPE SIZE & LENGTH:
33 1.25" ZONE 1 SIZE 170 ZONE 1 LENGTH 5 FT. HEAD LOSS
34 1.25" ZONE 2 SIZE 30 ZONE 2 LENGTH 1 FT. HEAD LOSS
(Friction losses through supply piping at the specific size, distance and flow, as listed above)

35 RETURN FLUSH LINE SIZE & RETURN:
36 1.00* ZONE 1 SIZE 170 ZONE 1 LENGTH 7 FT. HEAD LOSS
37 1.00* ZONE 2 SIZE 30 ZONE 2 LENGTH 2 FT. HEAD LOSS
(Friction losses through return piping at the specific size, distance and flow, as listed above)
38 STATIC HEAD:
39 9 FEET OF TOTAL STATIC HEAD LOSS (Vertical Lift)
(From the base of the Hydraulic Unit to the highest run of dripper tubing)

40 TOTAL PRESSURE LOSS (Add Items 26, 31, 33/34, 36/37, 39 + Flushing):
41 60 ZONE 1 HEAD LOSS, INCLUDES 18 FEET FLUSHING (Chart 3A)
42 51 ZONE 2 HEAD LOSS, INCLUDES 18 FEET FLUSHING (Chart 3A)
(Total head loss includes friction from pump to HU, through HU, supply piping, return piping, Chart 2A, and Chart 3A)

43 PUMP SIZING:
44 60 MAXIMUM TOTAL PRESSURE LOSS (Highest 41 or 42)
45 123 DISC FILTER BACKFLUSH (#31 + 115ft. @ 25 GPM)
46 15 GPM @ 123 FEET 115 VOLTS 1 PHASE 0.5 HP

47 TIMED DOSING PER ZONE:
48 ZONE ONE:
49 5.08 Dosing GPM 8.95 Min/Dose 45.5 Gallons Per Dose (Minimum Fill Ratio 3.5)
50 3.2 Ave. Cycles 5.3 Peak Cycles (Run Frequencies)
51 ZONE TWO:
52 5.08 Dosing GPM 8.95 Min/Dose 45.5 Gallons Per Dose (Minimum Fill Ratio 3.5)
53 3.2 Ave. Cycles 5.3 Peak Cycles (Run Frequencies)

54 AVERAGE DOSING REST TIMES: 228 Minutes
55 PEAK DOSING REST TIMES: 137 Minutes

	AS PROVIDED	AS GIVEN FROM SITE ELAVUATION OR DESIGNER
56 LANDSCAPE LINEAR LOADING RATE:	2.40 GPD/LF	2.70 GPD/LF
57 SOIL LOADING RATE:	0.16 GPD/Sq. Ft.	0.60 GPD/Sq. Ft.

Title: CALCULATION SHEET - MOUND B.R. Knez Construction, Inc. Kirtland Lake, Ohio	
DR. BY: WSO	Engineered by: StreamKey Engineered Plumbing & Wastewater Solutions 10515 Reading Road, Cincinnati, Ohio 45241 513-792-1221 phone / 513-792-1223 fax
CK. BY: EJK	
DATE:	
SCALE: None	
SHEET NO.	FILE:

REVISIONS	BY
REVISED SEPTIC MAY 03, 2010	WSO

Barrington CONSULTING GROUP, INC.
9114 TYLER BLVD., MENTOR, OHIO 44060
PHONE 440.205.1260 FAX 440.205.1262
www.BarringtonCGI.com

KNEZ
B.R.KNEZ CONSTRUCTION, INC.
8023 CRILE RD. - SUITE 250
CONCORD TWP, OHIO 44077
440-710-0711

SITE PLAN
7495 SUGARHOUSE HILL CT., KIRTLAND, OHIO 44094
S/L 5 THE RESERVE AT STONE CREEK SUBDIVISION VOL. 50 PG. 31

DRAWN	WSO
CHECKED	DWN
DATE	APR. 28, 2010
SCALE	1" = 20'
JOB NO.	10010-005
SHEET	3/3
OF	SHEETS

10010-005