# SITE PLAN FOR MARTY AND DENISE BABIC

ALL THAT CERTAIN LANDS SITUATE IN LOT 20. IN LEROY TOWNSHIP NO. II RANGE IV OF THE CONNECTICUT WESTERN RESERVE COUNTY OF LAKE STATE OF OHIO. AS RECORDED UNDER INSTRUMENT NO. 970013627 IN THE OFFICE OF THE COUNTY RECORDER.

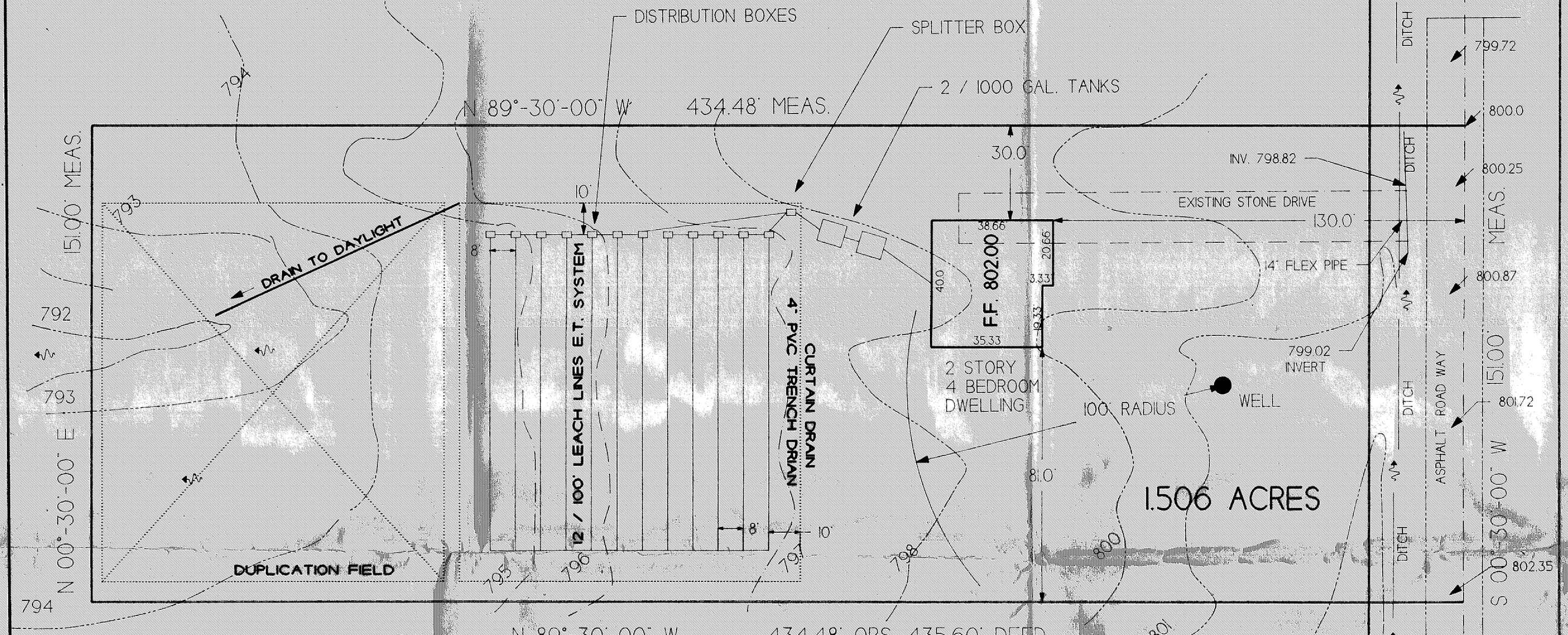


## ASSUMED ELEVATIONS

ASSUMED BEARINGS

## LEGEND

- MONUMENT BOX
- IRON PIN
- IRON PIPE
- P.K. NAIL WITH SHINER
- PUBLIC UTILITY POLE
- WATER CONNECTION
- AIR CONDITIONER UNIT
- STORM SEWER CATCH BASIN
- HANDICAPPED PARKING
- TRAFFIC LIGHT
- UTILITY BOX
- GAS METER
- LIGHT POLE
- FIRE HYDRANT
- MANHOLE
- DOWNSPOUT
- STOP SIGN TRAFFIC

REVIEWED AND ACCEPTED
LAKE COUNTY GENERAL
HEALTH DISTRICT
Date 7/23/97 BY [signature]

SEWAGE DISPOSAL PERMIT MUST BE OBTAINED BY A LAKE COUNTY LICENSED INSTALLER BEFORE INSTALLATION IS STARTED.

## TYPICAL E.T. CROSS SECTION NO SCALE

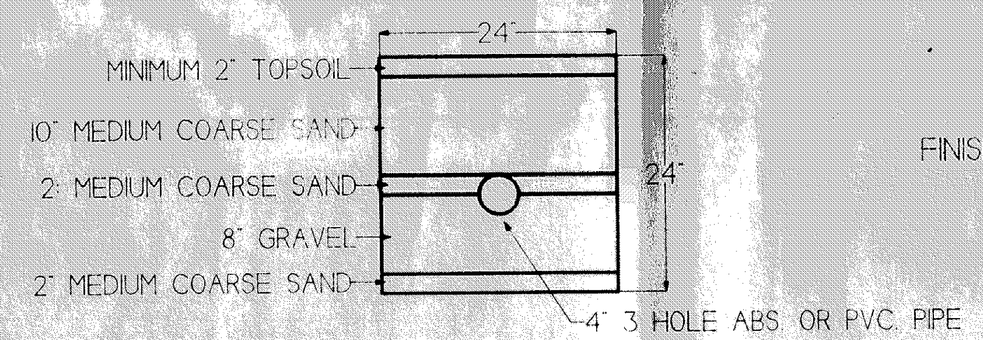


## CURTAIN DRAIN CROSS SECTION

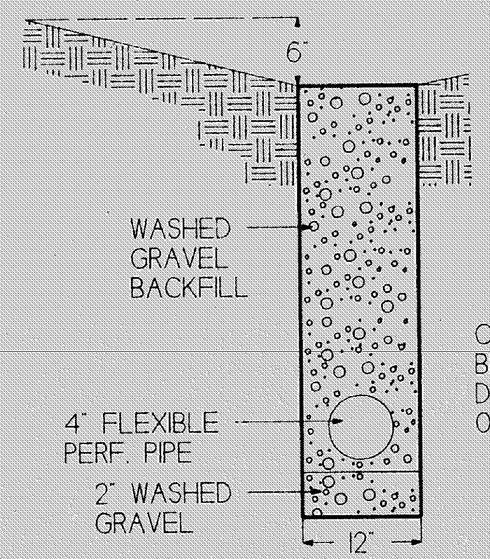


" THE STANDARD ET TRENCH IS 24 INCHES HOWEVER THE TRENCH CAN VERY BETWEEN 18 INCHES TO 30 INCHES DEEP IF NECESSARY. WHEN TRENCH DEPTH VARIES, THE SAND AT THE TOP OF TRENCH WILL VARY FROM 10 TO 18 INCHES DEEP. "

ET TRENCHES MUST BE 18 INCHES DEEP NO DEEPER

CURTAIN DRAIN MUST BE AT LEAST 6 INCHES DEEPER THAN BOTTOM OF LOWEST TRENCH.

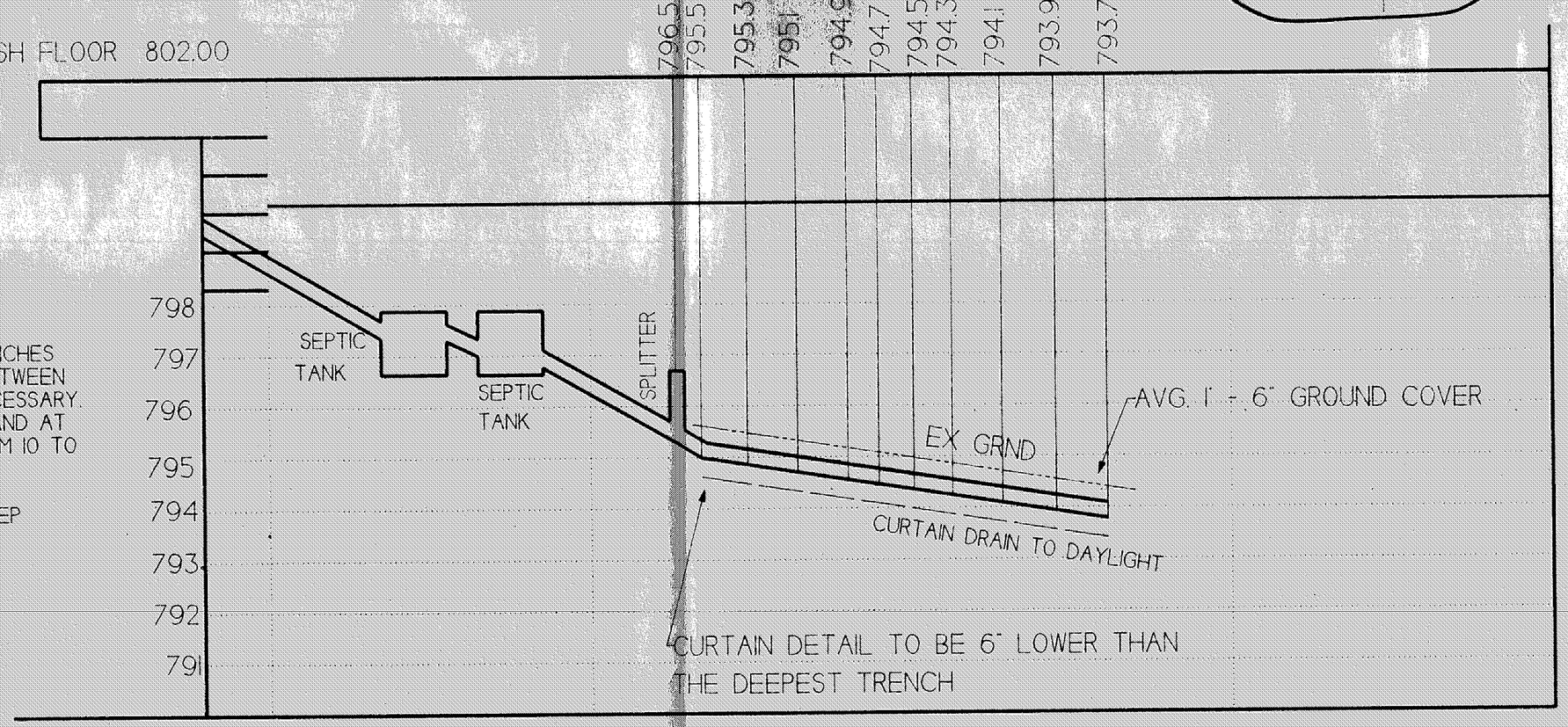


HYDRAULIC PROFILE 1" = 20'

VERTICAL SCALE 1" = 20'

GRAPHIC SCALE

( 1" = 20' FEET )

" I THE UNDERSIGNED HEREBY CERTIFY THAT THE TOPOGRAPHY SHOWN HERE ON INDICATED BY 1' CONTOURS AND ELEVATIONS REPRESENTS AN ACTUAL FIELD TOPOGRAPHIC SURVEY MADE BY ME ON THE 15TH DAY OF JUNE, 1997 AND THAT THE ELEVATIONS WERE TAKEN AT APPROPRIATE INTERVALS AND THAT AS OF THAT DATE THEY EXISTED AS INDICATED HEREON. "

| DESCRIPTION | REVISIONS |
|---|---|

STATE OF OHIO
TIMOTHY E. STOCKER
No. 7245
REGISTERED PROFESSIONAL SURVEYOR


CRABBS' SURVEYING SERVICE
MIDLAND BUILDING
10 WEST ERIE STREET, SUITE 101
PAINESVILLE, OHIO 44077
PHONE (216) 357-5941
FAX (216) 357-1816
1-800-488-3968
TIMOTHY E. STOCKER P.S. 7245


COPYRIGHT 1997 CRABBS SURVEYING

| DRAWN BY | SCALE | DATE | PRINTED | DRAWING NO. | SHEET NO. |
|---|---|---|---|---|---|
| TES | 1" = 20' | JUNE 97 | | 1564BPLT | 1 \ 1 |