Home 3?? ????
Cell 775 ????

Erosion and Sediment Control Schedule

Ingress-Egress
A stone access drive complete with under lying geo-textile fabric (20 feet wide and 50 feet long) for ingress and egress at the site shall be installed. This drive shall be the only entrance and exit to the site.

Silt Fence
All silt fence shall be installed prior to any earthwork activities at the site in the locations shown on the site plan as well as along the front of any lot that slopes towards the street.

Temporary Seeding
Disturbed areas of the site that are to remain idle for more than thirty (30) days shall be properly seeded and straw mulched within seven (7) days of completion of initial grading. Temporary seeding and mulching of a thirty (30) foot strip of the entire front of the lot shall be maintained on the site once initial grading is complete.

Stabilization of critical areas within fifty (50) feet of any stream or wetland shall be complete within two (2) days of the disturbance if the site is to remain inactive for longer than fourteen (14) days.

Mulching
Straw-mulch shall be applied at a rate of 1 bale per every ten (10) feet of curb, at a width of thirty (30) feet of the entire length of the lot. *Wood chips* may also be used but must be spread at a minimum depth of four inches over the thirty-foot width and must be accompanied by a properly installed silt fence.

Maintenance
Erosion and sediment controls shall be inspected every seven (7) days or within 24 hours of a 0.5" or greater rainfall event. Necessary repairs shall be made at this time.

Note:
All erosion and sediment control specifications, applications, and timetables are based of the descriptions and standards of The Ohio Department of Natural Resources "Rainwater and Land Development Manual" and can be found in the Lake County Erosion and Sediment Control Rules as adopted December 21, 1999

The specified erosion and sediment control standards are general guidelines and shall not limit the right of the county to impose, at any time, additional, more stringent requirements Nor shall the standards limit the right of the county to

Lake County Soil & Water Conservation District
125 East Erie Street
Painesville, Ohio 44077
Phone: (440) 350-2730
Fax: (440) 350-2601
www.lakecountyohio.org/soil

Construction Entrance Detail

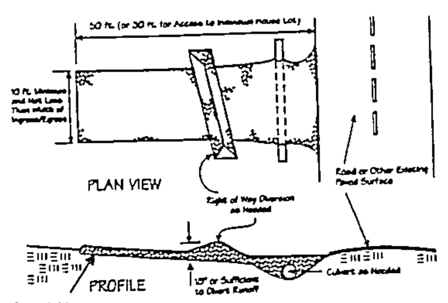

Silt Fence Detail

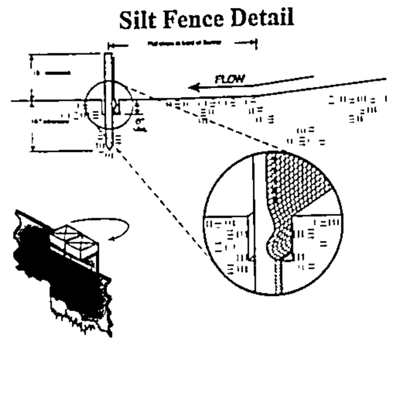

Temporary Seeding Specifications

Seeding Dates	Species	Lb./1,000 ft²	Per Ac.
March 1 to August 15	Oats Tall Fescue Annual Ryegrass	3 1 1	4 bushel 40 lb. 40 lb.
	Perennial Ryegrass Tall Fescue Annual Ryegrass	1 1 1	40 lb 40 lb 40 lb
August 16 to November 1	Rye Tall Fescue Annual Ryegrass	3 1 1	2 bushel 40 lb. 40 lb.
	Wheat Tall Fescue Annual Ryegrass	3 1 1	2 bushel 40 lb 40 lb.
	Perennial Ryegrass Tall Fescue Annual Ryegrass	1 1 1	40 lb 40 lb 40 lb.
November 1 to Spring Seeding	Use mulch only, sodding practices or dormant seeding.		

Note: Other approved seed species may be substituted.

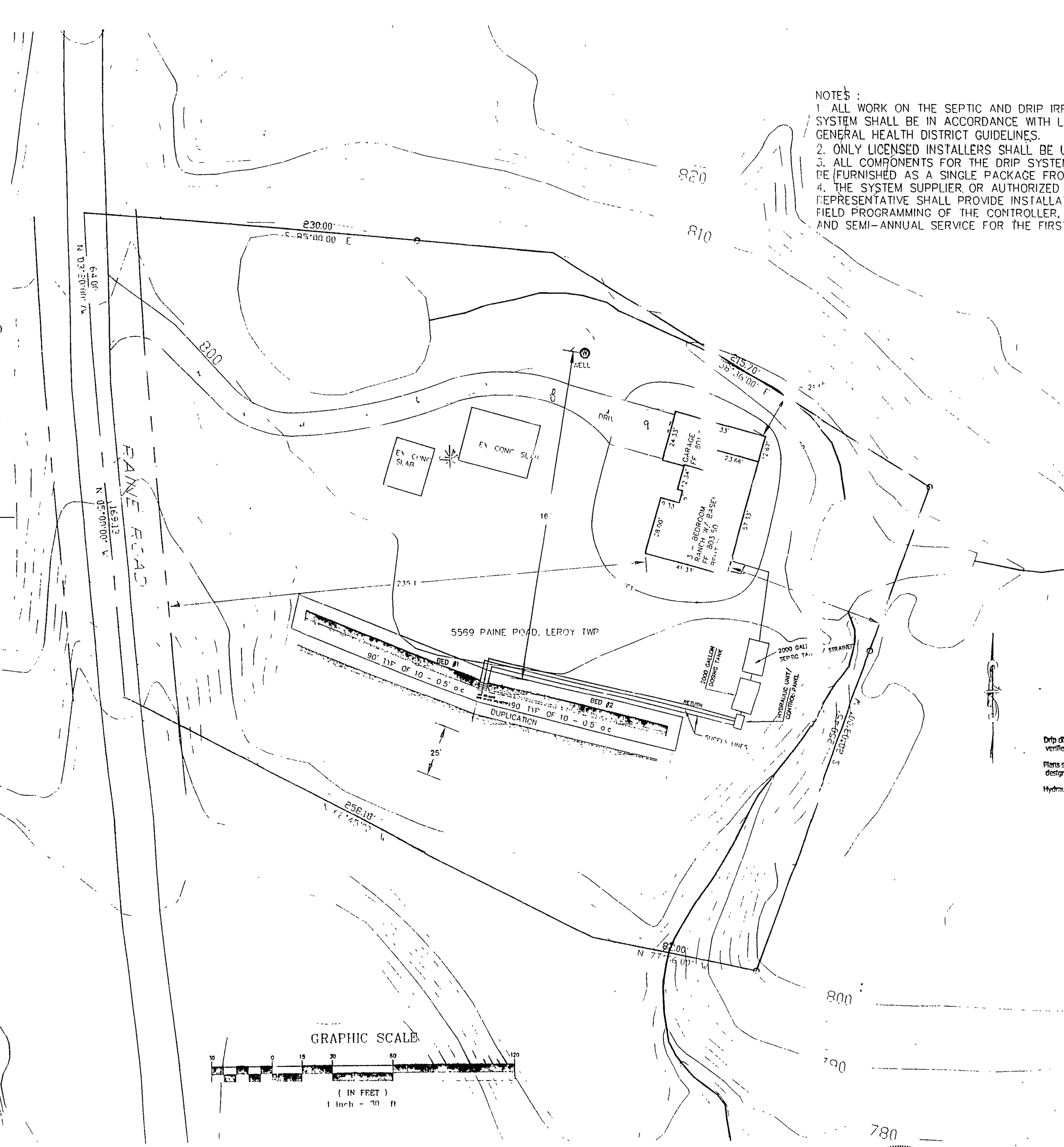

NOTES :
1. ALL WORK ON THE SEPTIC AND DRIP IRRIGATION SYSTEM SHALL BE IN ACCORDANCE WITH LAKE COUNTY GENERAL HEALTH DISTRICT GUIDELINES.
2. ONLY LICENSED INSTALLERS SHALL BE USED.
3. ALL COMPONENTS FOR THE DRIP SYSTEM SHALL BE FURNISHED AS A SINGLE PACKAGE FROM ONE SUPPLIER.
4. THE SYSTEM SUPPLIER OR AUTHORIZED LOCAL SERVICE REPRESENTATIVE SHALL PROVIDE INSTALLATION ASSISTANCE, FIELD PROGRAMMING OF THE CONTROLLER, START UP ASSISTANCE AND SEMI-ANNUAL SERVICE FOR THE FIRST YEAR OF OPERATION.

DRIPPER LINE PRESSURE CHART 3A FIELD FLUSHING

LENGTH LINEAR FEET	HEAD LOSS PSI	HEAD LOSS FT
50	7	16
60	7	16
70	7	16
80	7	16
90	7	16
100	7	16
110	7	16
120	7	16
130	7	16
140	7	16
150	7	16
160	7	16
170	7	16
180	7	16
190	7.4	17
200	8	18
210	8.6	20
220	9.2	21
230	9.9	23
240	10.5	24
250	11.2	26
260	12	28
270	12.7	29
280	13.5	31
290	14.3	33
300	15.2	35
310	16	37
320	16.9	39
330	17.9	41
340	18.9	44
350	19.9	46
360	20.9	48
370	22	51
380	23.1	53
390	24.2	56
400	25.4	59

CENTRAL HYDRAULIC UNIT CHART 2A FLOW vs HEAD LOSS

FLOW IN GPM	TOTAL LOSS IN TDH 25 gpm UNIT	TOTAL LOSS IN TDH 15 gpm UNIT
5	2	4
6	2	4
7	3	5
8	4	6
9	5	7
10	6	8
11	7	9
12	7	11
13	8	12
14	9	13
15	10	16
16	12	19
17	14	22
18	16	24
19	18	27
20	20	28
21	21	
22	22	
23	23	
24	24	
25	25	

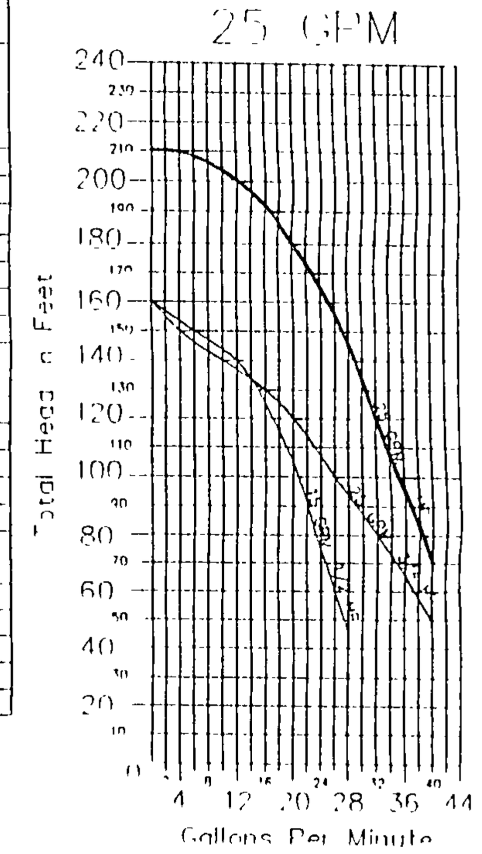

SPECIFICATION

The laminar flow collar shall be made of non corrosive, glueable PVC and have sufficient holes in the outer guide tube to assure laminar flow for the rated capacity. The inner flow collar shall extend near the bottom to provide sufficient cooling flow for the motor. The dimension between the inner collar and the pump motor shall not restrict flow to the pump intake, but will provide for ... of surfaces. The laminar flow collar shall be a Cool Guide as manufactured by American Manufacturing Company, Inc. Patent Pending.

INSTALLATION INSTRUCTIONS

1. Measure the distance from the bottom of the tank to 6" down from the top of the riser. Cut the extension pipe (by others) to the length necessary to reach this height. Cut 1/2 of the pipe down 12" to 18" away from the top of the pipe for pump discharge pipe.
3. Glue the extension coupling (by others) to the extension pipe and to the Cool Guide.
4. For repairs glue on the Cool Guide flat cap and place the Cool Guide firmly in the bottom of the tank. Attach the extension to the riser with the anchors as shown.
5. For new construction: Anchor the flat cap to the bottom of the tank in the proper location to hold Cool Guide and extension. The cap may or may not be glued to the device. Attach the extension ... with the anchors as shown.
6. Place the pipe dope on the Cool Guide adapter threads and thread them into pump discharge.
7. Attach cool... collar to adapter with set screw provided.
8. Glue pipe ... flow collar and with pump attached, lower into the guide tube.
9. Attach to ... charge pipe, valves, and connect electrical as specified.

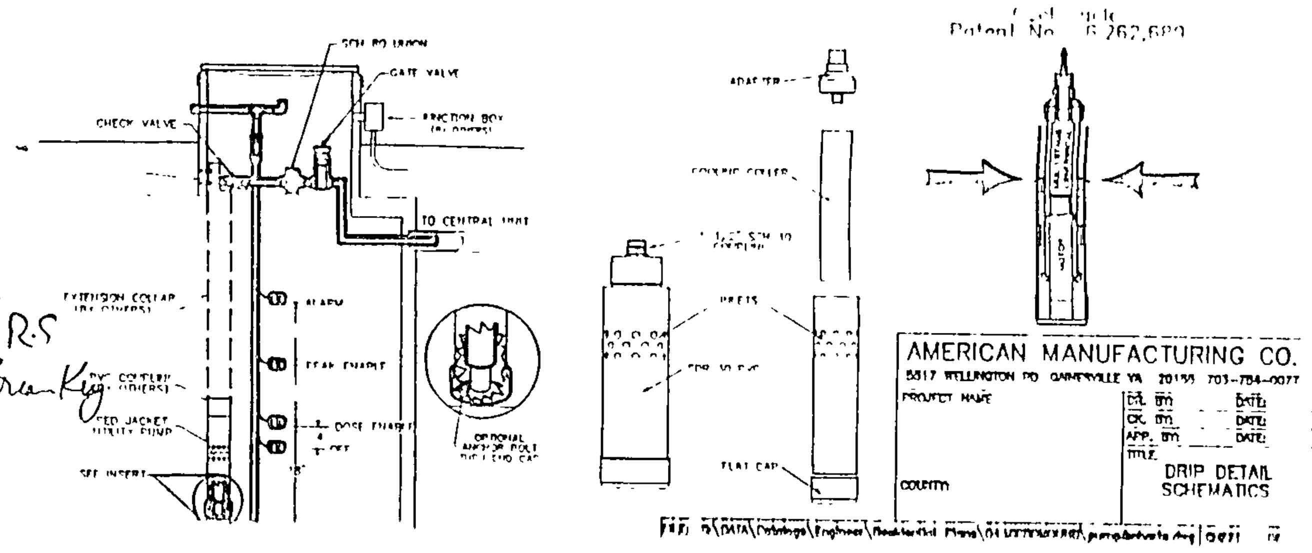

AMERICAN MANUFACTURING CO.
5317 WELLINGTON RD GAINESVILLE VA 20155 703-754-0077
PROJECT NAME
DR. BY / DATE:
CK. BY / DATE:
APP. BY / DATE:
TITLE: DRIP DETAIL SCHEMATICS
COUNTY

DRIP DISTRIBUTION PLAN SUBMITTAL REVIEW

	Date	Name
Drip distribution area has been field verified and protected with marking tape	8-13-03	Gerald B. Norris
Plans submitted to LCGHD and meet design criteria	7-18-03	Gerald B. Norris R.S.
Hydraulic calculations verified and accurate	7-21-03	Joe Keiser - Stra... Kg

GENERAL NOTES - DRIP DISPOSAL

1. ALL INSTALLATION AND CONSTRUCTION TECHNIQUES SHALL CONFORM TO COUNTY CODES AND STATE BOARD OF HEALTH "SEWAGE HANDLING AND DISPOSAL REGULATIONS" PERTAINING TO ON SITE SEWAGE SYSTEMS AND THE PERMIT FOR THIS SITE.
2. THE INSTALLATION OF THIS SYSTEM SHALL BE IN ACCORDANCE WITH SPECIFICATIONS AND PROCEDURES AS SUPPLIED BY THE MANUFACTURER OF THE EQUIPMENT.
3. ALL PVC PIPE AND FITTINGS SHALL BE PVC SCH 40 TYPE 1 RATED FOR PRESSURE APPLICATIONS. ALL GLUED JOINTS SHALL BE CLEANED AND PRIMED WITH PURPLE (DYED) PVC PRIMER PRIOR TO BEING GLUED.
4. ALL CUTTING OF PVC PIPE, FLEXIBLE PVC AND DRIPPER TUBING SHALL BE ACCOMPLISHED WITH PIPE CUTTERS APPROVED BY MANUFACTURER. NO SAWING OF PVC, FLEXIBLE PVC OR DRIPPER TUBING ALLOWED.
5. ALL PVC PIPE, FLEXIBLE PVC AND DRIPPER TUBING IN THE WORK AREA SHALL HAVE THE ENDS COVERED WITH DUCT TAPE TO PREVENT CONSTRUCTION DEBRIS FROM ENTERING THE PIPE. PRIOR TO GLUING ALL JOINTS SHALL BE INSPECTED FOR AND CLEARED OF ANY CONSTRUCTION DEBRIS.
6. NO WET WEATHER INSTALLATION IS PERMITTED.
7. NO ACTIVITY ON DRAINFIELD AREA OTHER THAN MINIMUM REQUIRED TO INSTALL SYSTEM. DO NOT PARK EQUIPMENT, DRIVE LARGE EQUIPMENT OVER, OR STORE MATERIALS ON DRAINFIELD SITE.
8. HORIZONTAL SPACING BETWEEN DRIPPER LINES AND THE INSTALLATION DEPTH SHALL BE AS SPECIFIED.
9. THE BUILDING SEWER SHALL BE 4" SCH40 PVC WITH A MINIMUM SLOPE OF 1/4" PER FOOT. THERE SHALL BE NO BENDS GREATER THAN 45 DEGREES. CLEANOUTS SHOULD BE PROVIDED EVERY 25 FEET. FOR CONSTRUCTION TECHNIQUES REFER TO THE "SEWAGE HANDLING AND DISPOSAL REGULATIONS".
10. IF TREES ARE TO BE REMOVED FROM SITE, CUT STUMPS FLUSH WITH GROUND. REMOVE BY HAND.
11. GRAVEL BASE UNDER CENTRAL CONTROL UNIT IS TO BE DRAINED VIA 2" PVC PIPE, SCREENED AT INLET AND OUTLET, DISCHARGE TO BE AT GRADE DOWN SLOPE (TO ENSURE DRAINAGE OF SURFACE WATER FROM UNIT).
12. THE CONTRACTOR SHALL BE CERTIFIED TO INSTALL THIS TYPE OF SYSTEM BY THE MANUFACTURER AND SHALL HOLD A PRE CONSTRUCTION MEETING WITH THE INDIVIDUALS RESPONSIBLE FOR SOIL EVALUATION, PERMITTING AND INSPECTIONS PRIOR TO SITE WORK BEGINNING TO INSURE PROTECTION OF THE SITE CONDITIONS AND TO ENSURE THE SYSTEM IS INSTALLED ACCORDING TO DESIGN.
13. IF SITE CONDITIONS ARE DETERMINED TO REQUIRE THE INSTALLATION OF THE SYSTEM TO DEVIATE FROM THESE PLANS, ALL SITE WORK SHALL STOP IMMEDIATELY AND THE DESIGNER SHALL BE NOTIFIED. ANY ONGOING WORK SHALL BE AT THE SOLE RESPONSIBILITY OF THE CONTRACTOR.
14. DRAINFIELD SUPPLY AND RETURN LINES TO BE INSTALLED AT ADEQUATE DEPTH TO PREVENT FREEZING.

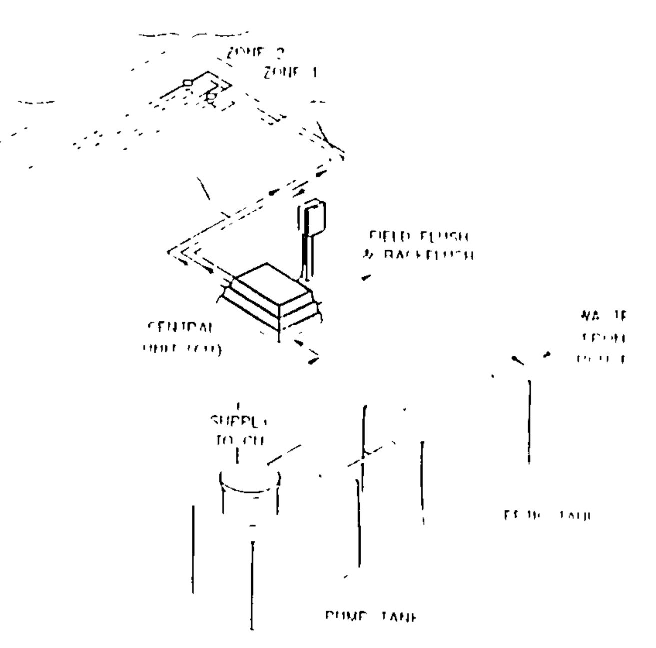

MICROMOUND DRIP DISTRIBUTION SYSTEM

NOTE: DOMESTIC SEWAGE WILL FLOW BY GRAVITY THROUGH THE SEPTIC TANK THEN INTO A FINAL DOSING TANK. THE CENTRAL UNIT WILL DISPOSE OF THE EFFLUENT BY ALTERNATELY DOSING MULTIPLE ZONES IN THE ABSORPTION AREA.

THE CENTRAL UNIT COMPRISES BOTH THE CONTROL AND THE HYDRAULIC UNIT.

OWNER GERALD T. BENDER
225 EAST PROSPECT STREET
PAINESVILLE, OHIO 44077

NOTES
1. The Contractor Shall Verify the Following Before Starting: Finish Floor Elevations and House Size. Location and elevation of existing utility connections.
2. Contractor Shall Contact OUPS at least 2 Working Days prior to construction, 1-800-362-2764

"I, the undersigned hereby certify that this topography, indicated by 1' contours and elevations shown hereon represents an actual field survey made by me in May 2003 and that the elevations were taken at appropriate intervals and that as of that date they existed as indicated hereon."

David A. Rapp 7/7/03 Reg. No.

STATE OF OHIO — DAVID A. RAPP — 7597 — REGISTERED — PROFESSIONAL SURVEYOR

"I, certify this sewage system design meets the minimum requirements established by the LCGHD and the HS13 Guidance Manual, and the requirements and recommendations of the system manufacturer."

David A. Rapp 7/7/03 Reg. No.

23066

ROOF DRAINS SHALL DISCHARGE TO SPLASH BLOCKS.

Stormwater Management Plan
Approved as shown and/or noted
JA... GILLS...
County Drainage Engineer
By L.S. Date 6/2/04

This project is exempt from ESC Plan Review
Date 8-22-03
Lake SWCD P.U.

COR Consultants, Inc.
23 S. Forest Street Geneva, Ohio 44041
440-466-8085

DATE JUNE 2003
DRAWN BY DAR
CHECKED BY RMO
APPROVED BY DAR
P.S. No. 7597

OWNER : GERALD T. BENDER
5569 PAINE ROAD
LEROY, OHIO

AMERICAN MANUFACTURING CO.
5317 WELLINGTON RD GAINESVILLE VA 20155 703 754 0077
PROJECT NAME
DR. BY / DATE:
CK. BY / DATE:
APP. BY / DATE
TITLE:
COUNTY
COVER SHEET

FILE: S:\DATA\Catalogs\Engineer\Residential Plans\04 MICROMOUND\Mounddripcov.dwg | SCALE | SHEET OF