GENERAL NOTES - DRIP DISPOSAL

1. ALL INSTALLATION AND CONSTRUCTION TECHNIQUES SHALL CONFORM TO COUNTY CODES AND STATE BOARD OF HEALTH "SEWAGE HANDLING AND DISPOSAL REGULATIONS" PERTAINING TO ON SITE SEWAGE SYSTEMS AND THE PERMIT FOR THIS SITE.
2. THE INSTALLATION OF THIS SYSTEM SHALL BE IN ACCORDANCE WITH SPECIFICATIONS AND PROCEDURES AS SUPPLIED BY THE MANUFACTURER OF THE EQUIPMENT.
3. ALL PVC PIPE AND FITTINGS SHALL BE PVC SCH 40 TYPE 1 RATED FOR PRESSURE APPLICATIONS. ALL GLUED JOINTS SHALL BE CLEANED AND PRIMED WITH PURPLE (DYED) PVC PRIMER PRIOR TO BEING GLUED.
4. ALL CUTTING OF PVC PIPE, FLEXIBLE PVC AND DRIPPER TUBING SHALL BE ACCOMPLISHED WITH PIPE CUTTERS APPROVED BY MANUFACTURER. NO SAWING OF PVC, FLEXIBLE PVC OR DRIPPER TUBING ALLOWED.
5. ALL PVC PIPE, FLEXIBLE PVC AND DRIPPER TUBING IN THE WORK AREA SHALL HAVE THE ENDS COVERED WITH DUCT TAPE TO PREVENT CONSTRUCTION DEBRIS FROM ENTERING THE PIPE. PRIOR TO GLUING ALL JOINTS SHALL BE INSPECTED FOR AND CLEARED OF ANY CONSTRUCTION DEBRIS.
6. NO WET WEATHER INSTALLATION IS PERMITTED.
7. NO ACTIVITY ON DRAINFIELD AREA OTHER THAN MINIMUM REQUIRED TO INSTALL SYSTEM. DO NOT PARK EQUIPMENT, DRIVE LARGE EQUIPMENT OVER, OR STORE MATERIALS ON DRAINFIELD SITE.
8. HORIZONTAL SPACING BETWEEN DRIPPER LINES AND THE INSTALLATION DEPTH SHALL BE AS SPECIFIED.
9. THE BUILDING SEWER SHALL BE 4" SCH40 PVC WITH A MINIMUM SLOPE OF 1/4" PER FOOT. THERE SHALL BE NO BENDS GREATER THAN 45 DEGREES. CLEANOUTS SHOULD BE PROVIDED EVERY 25 FEET. FOR CONSTRUCTION TECHNIQUES REFER TO THE "SEWAGE HANDLING AND DISPOSAL REGULATIONS".
10. IF TREES ARE TO BE REMOVED FROM SITE, CUT STUMPS FLUSH WITH GROUND. REMOVE BY HAND.
11. GRAVEL BASE UNDER CENTRAL CONTROL UNIT IS TO BE DRAINED VIA 2" PVC PIPE, SCREENED AT INLET AND OUTLET, DISCHARGE TO BE AT GRADE DOWN SLOPE (TO ENSURE DRAINAGE OF SURFACE WATER FROM UNIT).
12. THE CONTRACTOR SHALL BE CERTIFIED TO INSTALL THIS TYPE OF SYSTEM BY THE MANUFACTURER AND SHALL HOLD A PRE CONSTRUCTION MEETING WITH THE INDIVIDUALS RESPONSIBLE FOR SOIL EVALUATION, PERMITTING AND INSPECTIONS PRIOR TO SITE WORK BEGINNING TO INSURE PROTECTION OF THE SITE CONDITIONS AND TO ENSURE THE SYSTEM IS INSTALLED ACCORDING TO DESIGN.
13. IF SITE CONDITIONS ARE DETERMINED TO REQUIRE THE INSTALLATION OF THE SYSTEM TO DEVIATE FROM THESE PLANS, ALL SITE WORK SHALL STOP IMMEDIATELY AND THE DESIGNER SHALL BE NOTIFIED. ANY ONGOING WORK SHALL BE AT THE SOLE RESPONSIBILITY OF THE CONTRACTOR.
14. DRAINFIELD SUPPLY AND RETURN LINES TO BE INSTALLED AT ADEQUATE DEPTH TO PREVENT FREEZING.

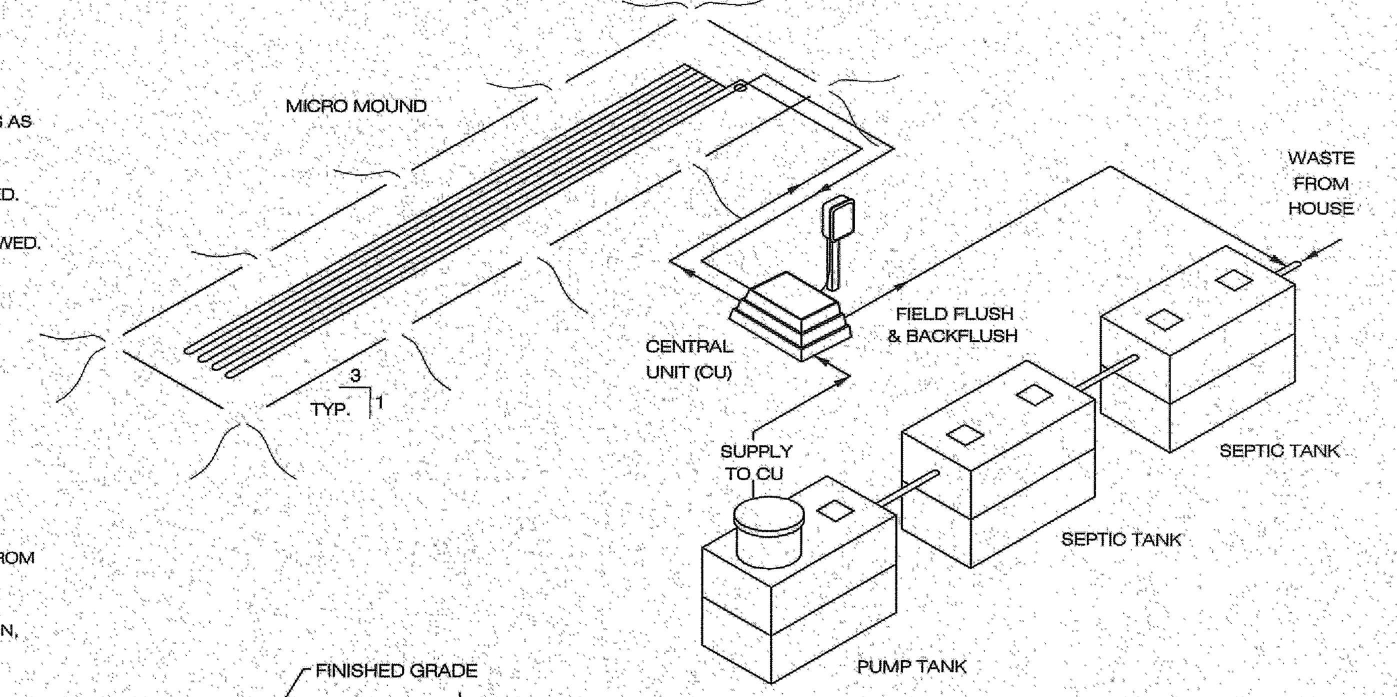

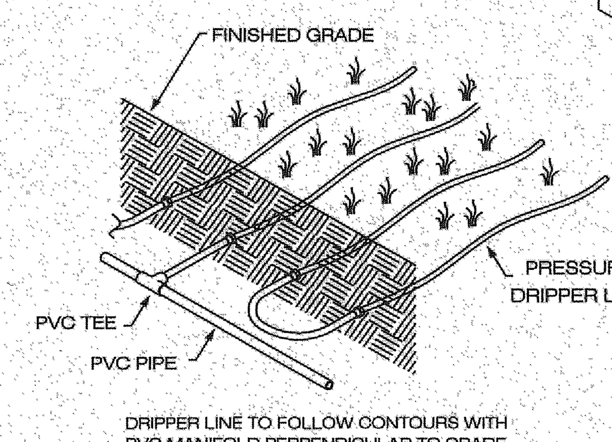

DRIPPER LINE TO FOLLOW CONTOURS WITH PVC MANIFOLD PERPENDICULAR TO GRADE

SUBSURFACE DISTRIBUTION SYSTEM

SCOPE:

THE CENTRAL UNIT WILL DISPOSE OF THE EFFLUENT BY ALTERNATELY DOSING MULTIPLE ZONES IN THE ABSORPTION AREA.

THE CENTRAL UNIT COMPRISES BOTH THE CONTROL AND THE HYDRAULIC UNITS.

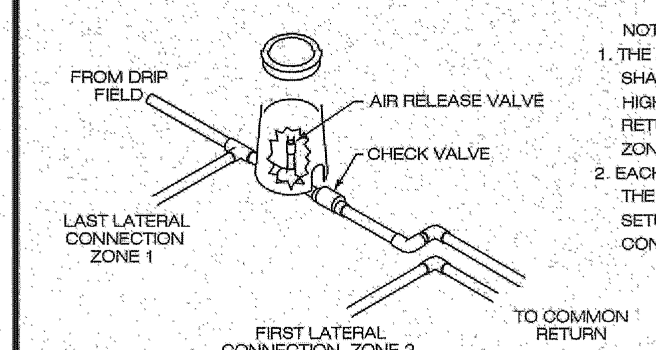

NOTE:
1. THE AIR RELEASE VALVE SHALL BE PLACED AT THE HIGHEST POINT ON THE RETURN LINE OF EACH ZONE.
2. EACH ZONE TO HAVE THE SAME VALVE BOX SETUP AND THEREAFTER CONNECTED.

AIR RELEASE & CHECK VALVE DETAIL
NTS

HYDRAULIC PROFILE
NTS

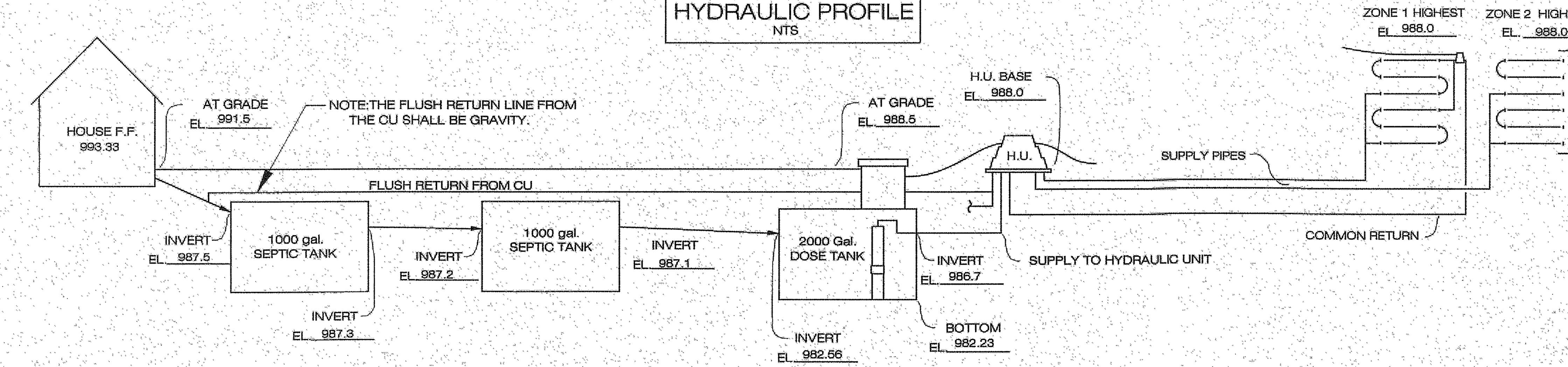

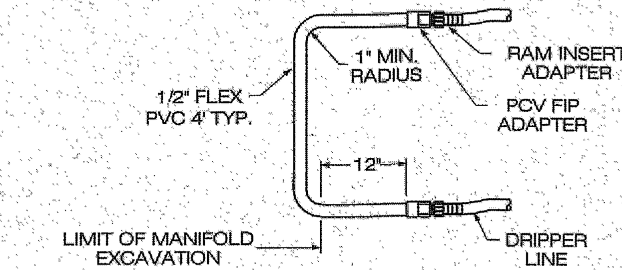

TYPICAL DRIP LOOP CONNECTION
NTS

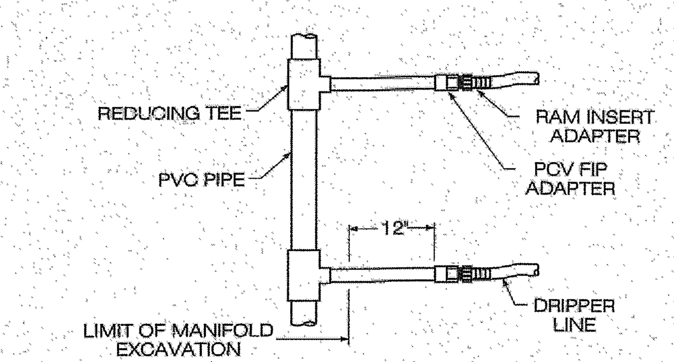

TYPICAL MANIFOLD CONNECTION
NTS

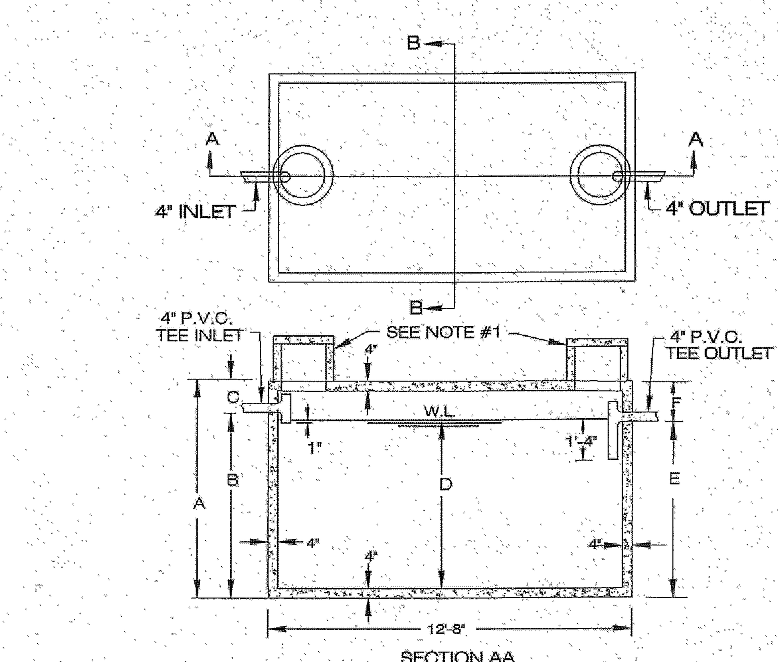

CAPACITY GAL.	A	B	C	D	E	F
2000	5'-6"	4'-2"	1'-4"	3'-7"	3'-11"	1'-7"
2250	5'-6"	4'-7"	0'-11"	4'-0"	4'-4"	1'-2"
2500	6'-4"	5'-0"	1'-4"	4'-5"	4'-9"	1'-7"
3000	7'-4"	5'-11"	1'-5"	5'-4"	5'-8"	1'-8"
3500	8'-4"	6'-9"	1'-7"	6'-2"	6'-6"	1'-10"
4000	9'-4"	7'-8"	1'-8"	7'-1"	7'-5"	1'-11"
5000	10'-4"	9'-5"	0'-11"	8'-10"	9'-2"	1'-2"

NOTES

A) 18" DIA. CONC. PLUG WITH HANDLE IS STANDARD EQUIPMENT.
B) 18" DIA. CONC. RISER, 15" OR 24" HIGH WITH CONC. LID IS OPTIONAL AT AN EXTRA CHARGE.

THE CONCRETE RISER ON THE OUTLET END WILL HAVE A MINIMUM 24" INSIDE DIAMETER.

2,000-5,000 GALLON SEPTIC TANKS

SCALE: NONE	APPROVED BY	DRAWN BY T.A.S.
DATE:9/23/74		REVISED

MACK INDUSTRIES, INC.
VALLEY CITY OHIO 44280
DRAWING NUMBER P-5

NOTES:
1.) ALL ELECTRIC COMPONENTS MUST BE INSTALLED UNDER NEC REQUIREMENTS.

2.) PRESSURE - COMPENSATING EMITTERS TO BE INSTALLED TO REGULATE FLOW RATE.

INTERCEPTOR DRAIN DETAIL

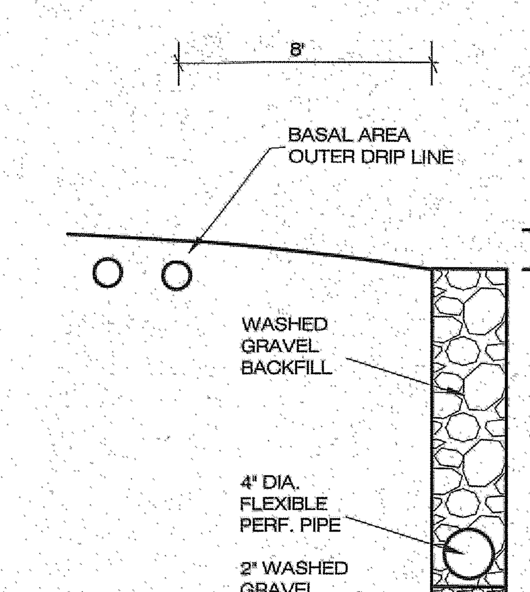

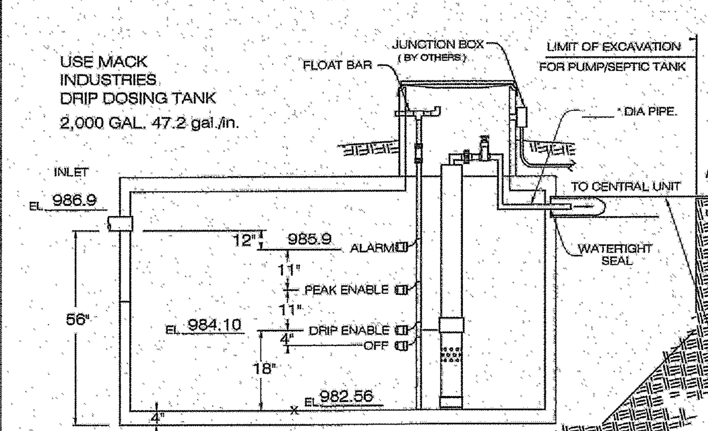

DRIP DOSE TANK DETAIL
NTS

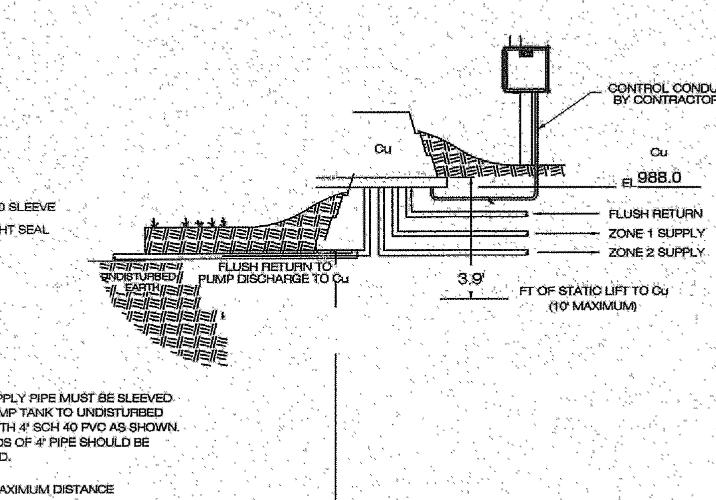

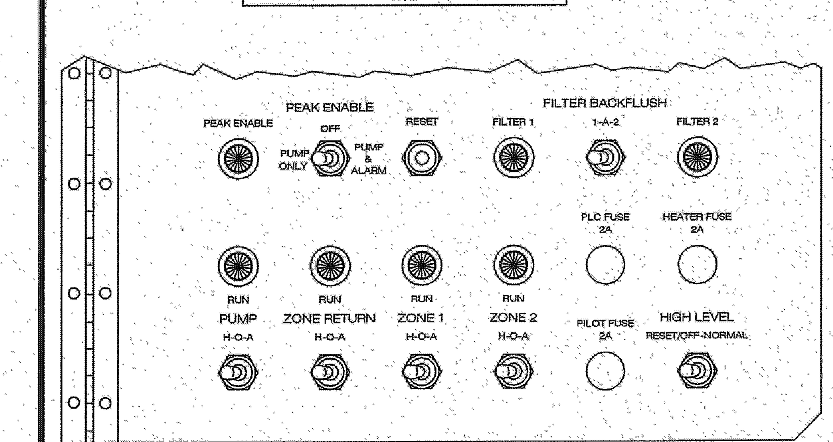

CONTROLLER SEQUENCE OF OPERATIONS PROVIDED IN OWNER'S MANUAL.

INNER DOOR LAYOUT

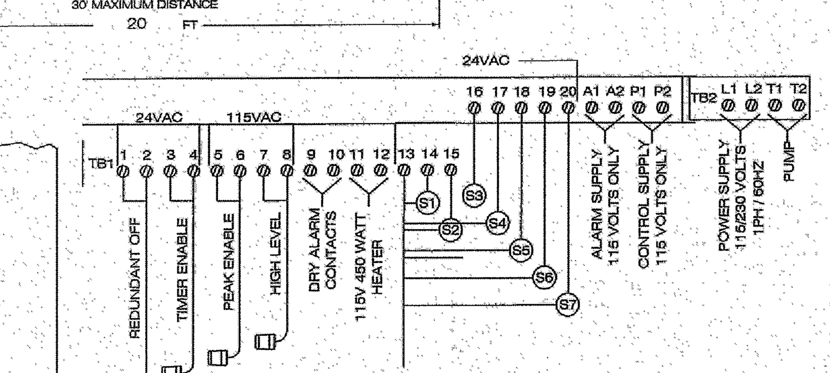

Pump and Control Detail

NOTES:
1. PLOW ENTIRE 20 'x 90 ' AREA OF DRAINFIELD (SAME WAY YOU WOULD A REGULAR MOUND).
2. ADD LAYER OF MOUND SAND INCORPORATING
3. PLACE DRIP TUBING ON TOP OF SAND IN THE 20 'x 90 ' UPPER SECTION OF DRAINFIELD.
4. ADD 2" LAYER OF MOUND SAND OVER TOP OF DRIP TUBING IN THE 20 'x 90 ' AREA
5. COVER ENTIRE 24 'x 102 ' AREA OF DRAINFIELD WITH A MINIMUM COVER OF 6" OF TOPSOIL WITH A TURTLE-BACK GRADE FOR POSITIVE DRAINAGE.
6. AN AGGRESSIVE TURF COVER OVER ENTIRE 24 'x 102 ' AREA IS RECOMMENDED (PREFERABLY SOD).

PLAN VIEW
NTS

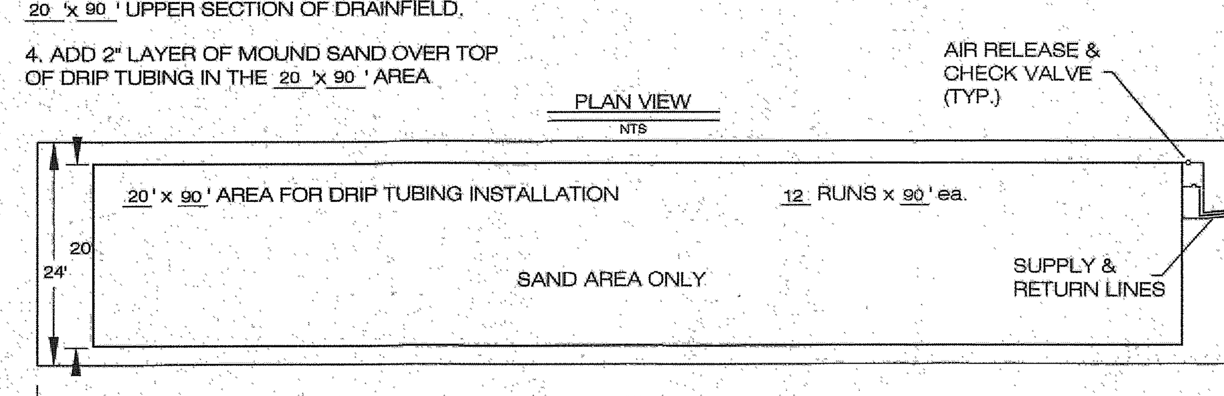

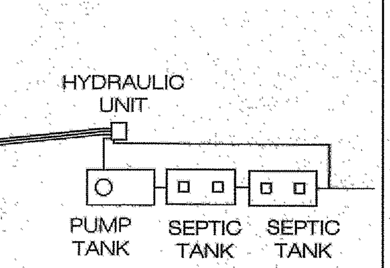

BASAL AREA: 20 'x 90 ' = 1800 sqft
BASAL AREA LOADING: 0.13 gpd/sqft
SAND BED: __'x__' = __ sqft
SAND BED LOADING: __ gpd/sqft
DRIP TUBING: 12 x 90 ' = 1080 L.F.
ZONE 1: 6 runs x 90 ' = 540 L.F.
ZONE 2: 6 runs x 90 ' = 540 L.F.
LANDSCAPE LINEAR LOAD: 0.22 gpd/L.F.

TREATMENT SCHEMATIC

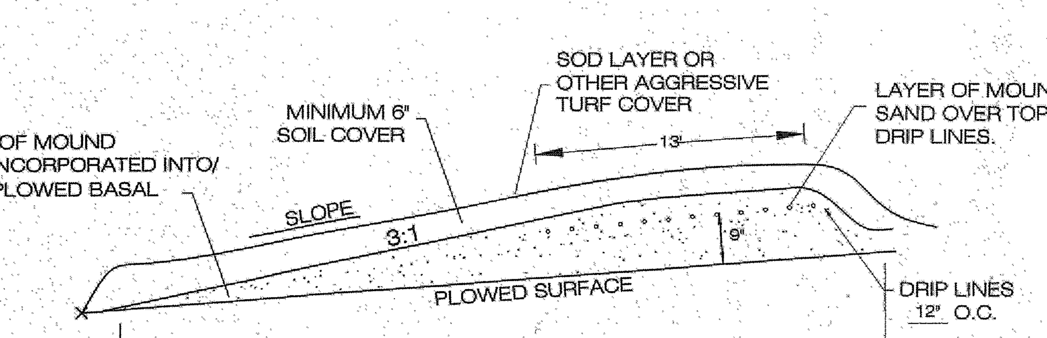

MICRO MOUND
CROSS-SECTION
NTS

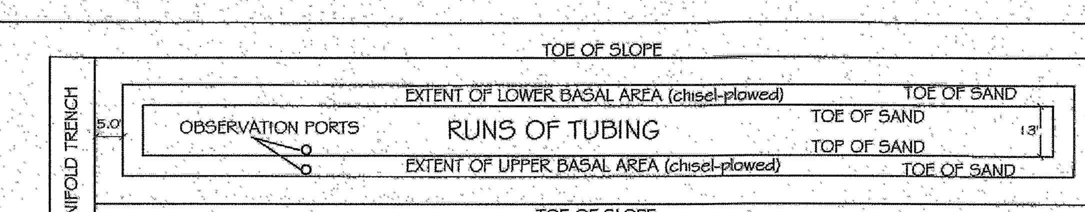

ZONE DETAILS

GENERAL SLOPE
**BOTH SUPPLY AND A COMMON RETURN LINE ARE TO BE SCH. 40 PVC PIPING WITH PRESSURE RATED FITTINGS AND FROST PROTECTED.

6 RUNS OF DRIP TUBING 90 LONG FOR A TOTAL OF 540 LINEAR FEET IN ZONE 2 PLACED 12"O.C.

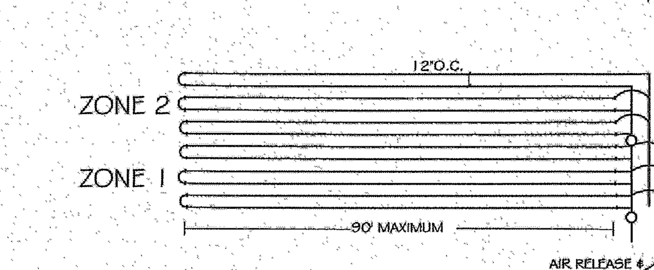

6 RUNS OF DRIP TUBING 90 LONG FOR A TOTAL OF 540 LINEAR FEET IN ZONE 1 PLACED 12" O.C.

MANIFOLD DETAIL
NOT TO SCALE

TITLE:	ZONE LAYOUT DRIP MOUND INSTALLATION
	Homeowner Location County, Ohio
DR. BY: RKM	Engineered By: StreamKey Engineered Plumbing & Wastewater Solutions 10515 Reading Road Cincinnati, OH 45241 513-792-1221
CK BY: EJK	
DATE:	
SCALE: None	
SHEET NO. / FILE:	

	Revisions
1	
2	
3	
4	
5	
6	

	Index
1	SITE PLAN
2	DETAILS
3	
4	
5	
6	

Jones Surveying, LLC
ENGINEERS - SURVEYORS - PLANNERS
1924 MENTOR AVE., PAINESVILLE, OHIO
(PH.) 440-357-1811 (FAX) 440-357-9173
(E-MAIL) hjonessurveying@yahoo.com

Date: 12/27/13
Scale: Hor. ____ Vert. ____
Filename: 13-105
Tab Name: 13-105TOPO
Computer: GMB

DETAILS
FOR TOM NORMAN
LEROY TOWNSHIP - LAKE COUNTY - OHIO

Sheet 2 Of 2

Contract No. 13-105