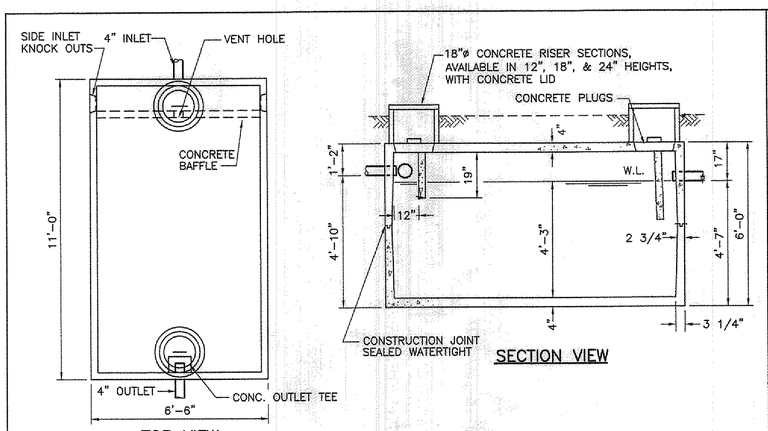

TOP VIEW

SECTION VIEW

NOTES:

1. REINFORCED PRECAST CONCRETE SHALL HAVE A COMPRESSIVE STRENGTH OF 5000 PSI @ 28 DAYS.
2. HANCORE RISERS SHALL BE 14" TALL. RISERS CAN BE SHORTENED OR EXTENDED IF NECESSARY.
3. 'POLYLOK' SEALS SHALL BE PROVIDED FOR INLET AND OUTLET CONNECTIONS. SEALS CAN BE USED FOR EITHER 3" OR 4" DIA. PIPE.

2000 GALLON SEPTIC TANK

COMMERICAL

DRAWN BY: BK	SCALE: 3/8"=1'-0"	DRAWING NO.: P-4A
DATE: 5-9-95	REV: 11-2-99 JAY	

MACK INDUSTRIES, INC.

201 COLUMBIA ROAD, VALLEY CITY, OHIO 44280 (216)483-3111

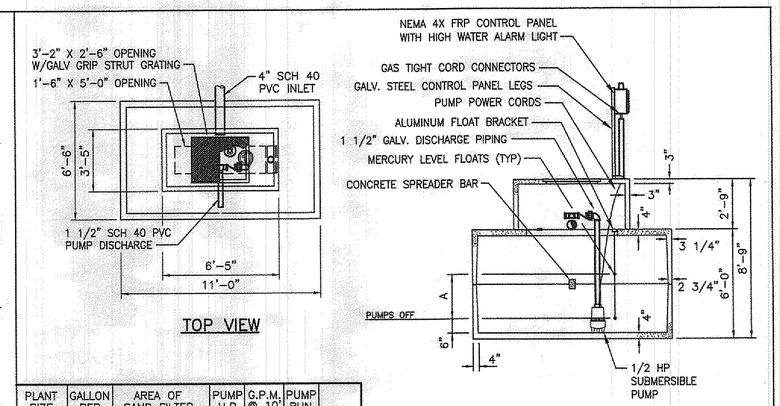

TOP VIEW

SECTION VIEW

PLANT SIZE (G.P.D.)	GALLON PER DOSE	AREA OF SAND FILTER DOSED (SQ. FT.)	PUMP H.P.	G.P.M. @ 10' T.D.H.	PUMP RUN TIME	A
16000	1250	667	1/2	130	9.6	2'-8"
17000	1325	708	1	160	8.3	2'-10"
17500	1368	730	1	160	8.6	2'-11"
18000	1407	750	1	160	8.8	3'-0"
19000	1485	792	1	160	9.3	3'-2"

THIS DRAWING IS THE PROPERTY OF MACK INDUSTRIES, INC., AND IT OR THE TECHNOLOGY CONTAINED HEREIN MAY NOT BE REPRODUCED NOR USED EXCEPT AS ORIGINALLY INTENDED WITHOUT THE EXPRESSED CONSENT OF MACK INDUSTRIES, INC.

2000 GALLON DOSING TANK

DRAWN BY: JAY	SCALE: 1/4" = 1'-0"	DRAWING NO.:
DATE: 09/20/01	REV:	DOS2K

MACK INDUSTRIES, INC.

201 COLUMBIA ROAD, VALLEY CITY, OHIO 44280 (330) 483-3111

* – DENOTED THAT PUMPS SIZES IS TO BE CONFIRMED WITH PUMP REQUIREMENTS IN THE SPECIFICATIONS.

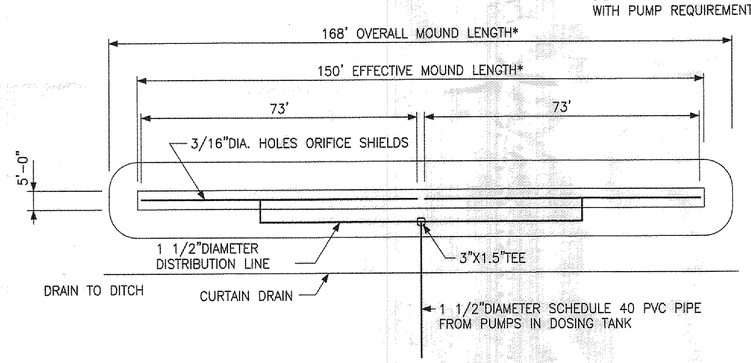

PLAN

SCALE: 1' = 20'

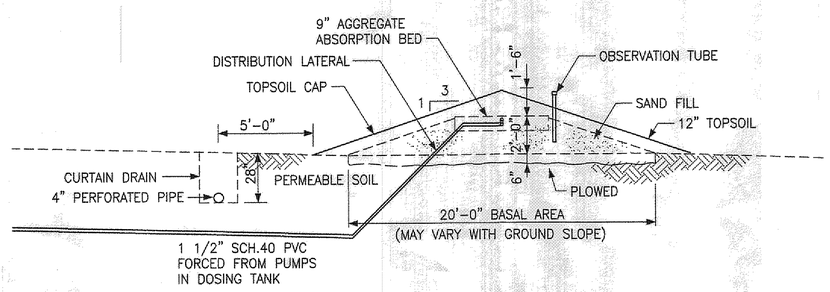

CROSS SECTION

SCALE: 1/4" = 1'-0"

LAKE COUNTY MOUND SYSTEM

ITEM		MOUND CALCULATIONS
NUMBER OF BEDROOMS		4
DESIGN FLOW RATE	(GPD)	480
EFFECTIVE MOUND LENGTH	FOOT	150
OVERALL MOUND LENGTH	FOOT (NOTE 1)	168
DESIGN LINEAR LOADING RATE	(GPD/FT)	3.3
DESIGN SAND LOADING RATE	(SF/FT)	6
BASAL LOADING RATE		0.6
ABSORPTION BED AREA	(SF)	482

NOTES:

1) FOR DISTRIBUTING LINE PIPING DETAIL, SEE SHEET 3.

CALCULATIONS

AS NOTED

JOB NUMBER: 12-3242	NO.	REVISION	BY	DATE
DATE: 12-3-03				
DRAWN BY: G R T				
CHECKED BY: L M E				

orlow Engineering, Inc.
10 West Erie Street, Suite 201 Painesville, Ohio 44077
Phone (440) 350-8008/350-8228 Fax (440) 352-8186
orlowengineering@adelphia.net

TED A. AND CINDY A. DENNISON

MADISON TOWNSHIP - LAKE COUNTY - OHIO

MOUND PLAN, CROSS SECTION AND CALCULATIONS

C-2

SHEET 2 OF 3