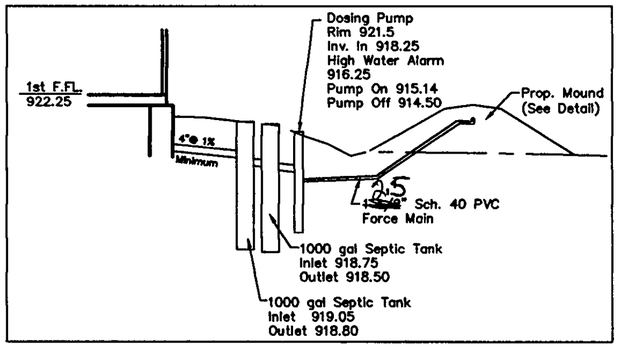

Hydraulic Profile

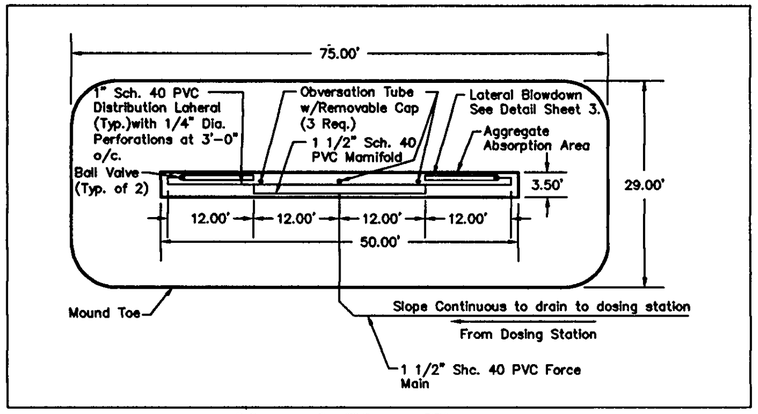

Mound Plan View

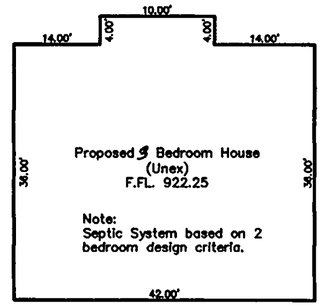

Notes:
1. Screen strainer shall be included on discharge tee and should be readily accessable and cleanable. It shall remove materials larger than 1/8" in greatest dimension.
2. Pump Size: GPM @ 15' TDH.
3. Dose mound 60 gallons every 6 hours.

36.08

Robert French
Vol. 854-Pg.1046
1A-47-1

SYMBOL LEGEND	
	Iron Pin Found
	Power Pole
W	Well

REVIEWED AND ACCEPTED
LAKE COUNTY GENERAL
HEALTH DISTRICT

Date 11-3-00 BY Arnold B Morris

SEWAGE DISPOSAL PERMIT MUST BE OBTAINED BY A LAKE COUNTY LICENSED INSTALLER BEFORE INSTALLATION IS STARTED

STATE OF OHIO
STEVEN N. ROESSNER
S-7070
REGISTERED
PROFESSIONAL SURVEYOR

"I, the undersigned hereby certify that this topography, indicated by 6", 1' or 2' contours, and the elevations shown hereon represent an actual field survey made by Foresight Engineering Group, Inc. on the 15 day of September, 2000 and that the elevations were taken at appropriate intervals and that as of that date they existed as indicated hereon."

NAME

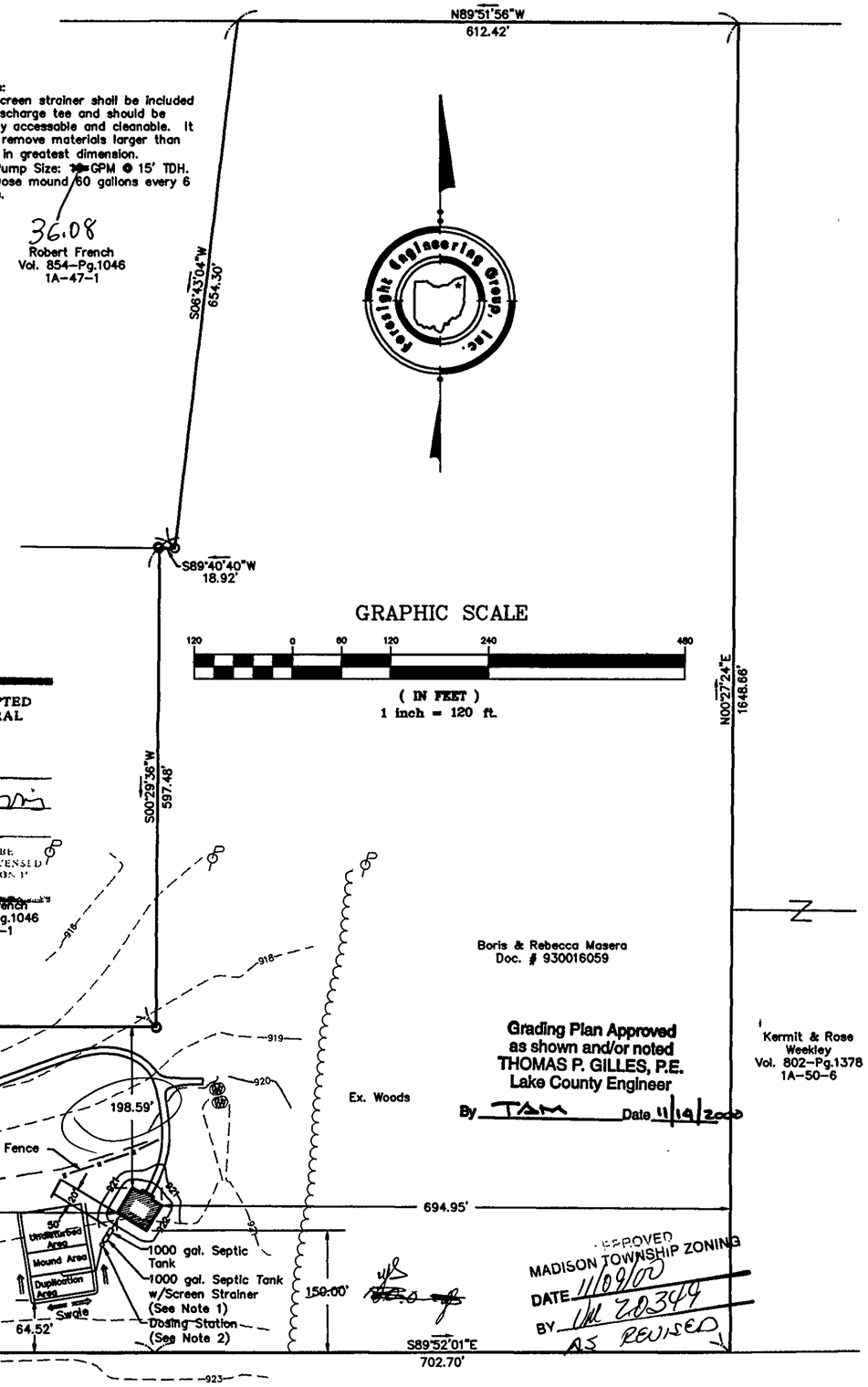

MADISON - CHARDON ROAD (S.R. 528) ~ 60'

Foresight Engineering Group
Engineers & Surveyors
440 286-1010
440 286-1034 fax
320 Center Street, Unit F
Chardon, Ohio 44024

SCALE : Horz. 1" = 120'
Vert. None

FILE NAME:
I:\Mas10001\siteplan2

DATE : October 24, 2000

BORIS MASERA
Madison - Chardon Road (S.R. 528)
Madison Twp. - Lake County - Ohio
Site Plan

SHEET NO.
1/3

I:\sdskproj\Mas10001\cad\siteplan2.dwg Tue Oct 24 14:26:37 2000 Copyright Foresight Engineering Group, Inc.