REVISIONS	BY
REVISED SEPTIC AUG 10, 2005	WSO

Barrington CONSULTING GROUP, INC.
9114 TYLER BLVD., MENTOR, OHIO 44060
PHONE 440.205.1260 FAX 440.205.1262
BCG@BarringtonCGI.com

STATE OF OHIO — DAVID W NOVAK S-7507 — REGISTERED SURVEYOR

DETAILS

S/L 6 BELLMORE DR. PAINESVILLE TWP. OH. 44077
BELLMORE SUBDIVISION VOL. 44 PG. 21

LITTLE MOUNTAIN HOMES, INC.

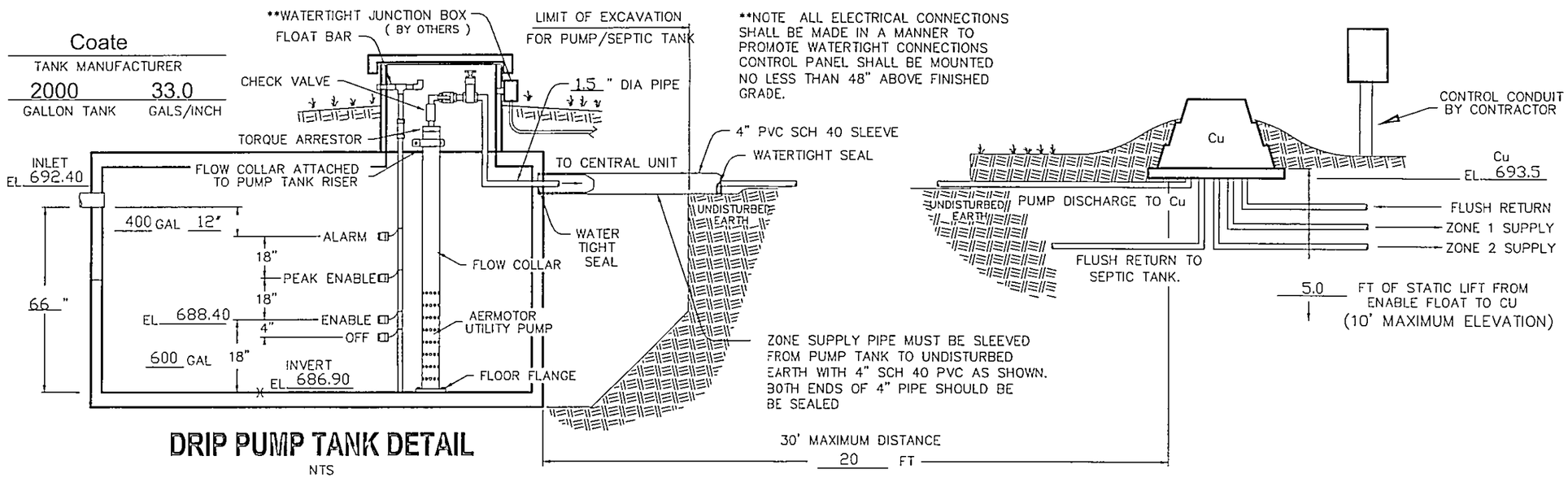

DRIP PUMP TANK DETAIL

NTS

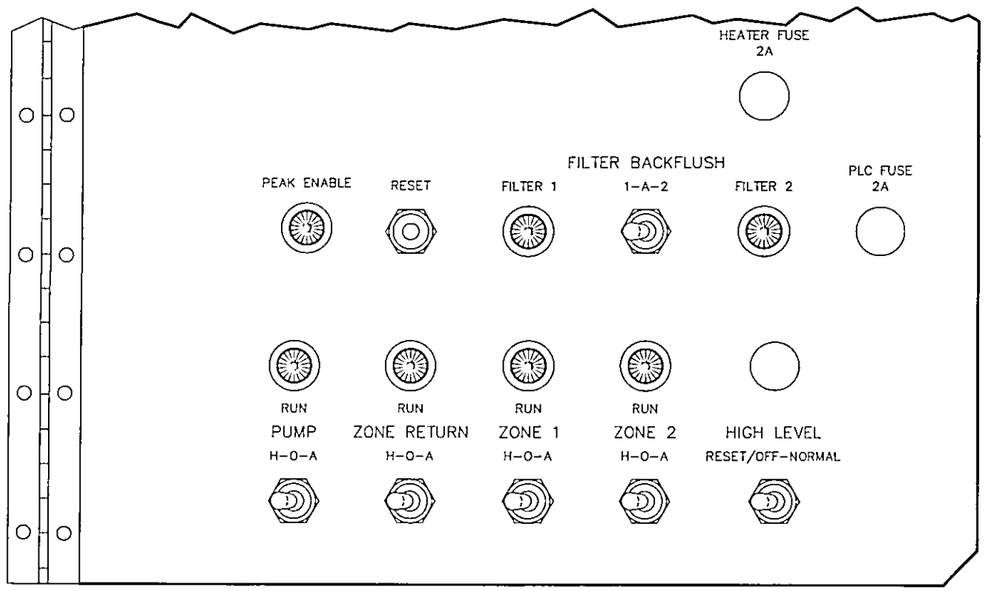

INNER DOOR LAYOUT

NTS

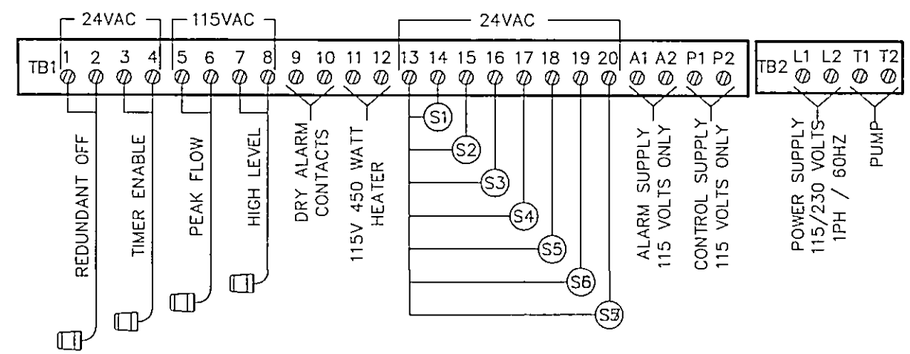

PUMP & CONTROL DETAIL

DRAWN	WSO
CHECKED	DWN
DATE	AUG 05, 2005
SCALE	NONE
JOB NO	02007-06
SHEET	4/5 OF SHEETS

02007-06

FORM W:\BLOCKS\FORMS\BCGA3-SHARP.DWG