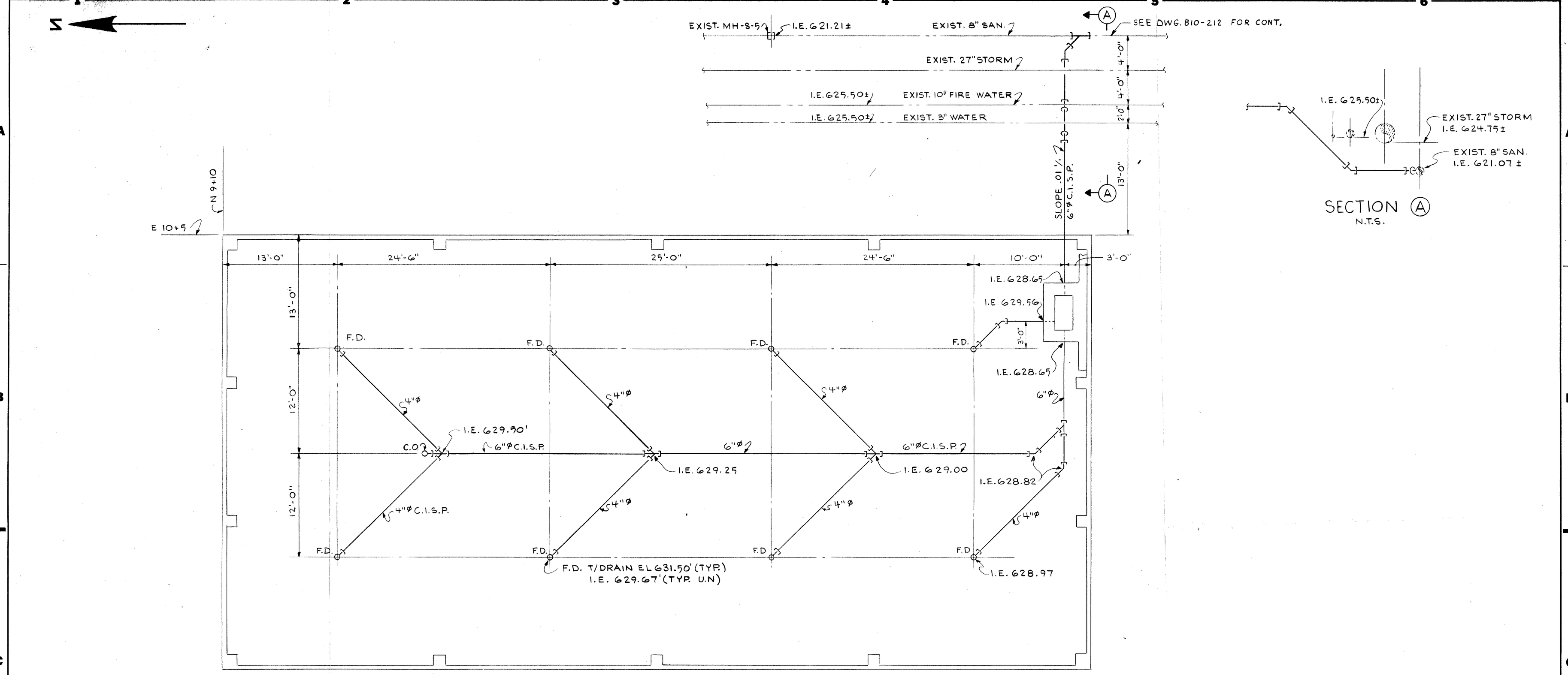

PLAN
SCALE 3/16" = 1'-0"

SECTION (A)
N.T.S.

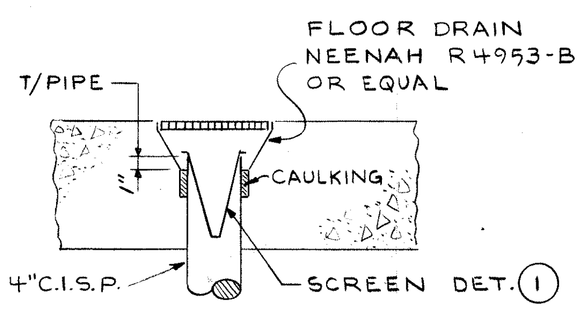

TYP. FLOOR DRAIN (F.D.)
N.T.S.

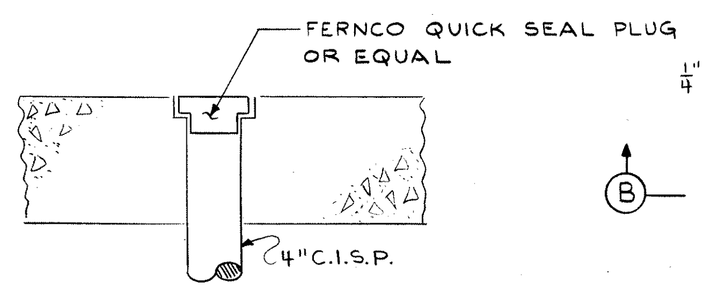

TYP. CLEANOUT (C.O.)
N.T.S.

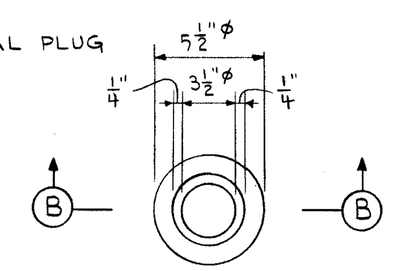

PLAN

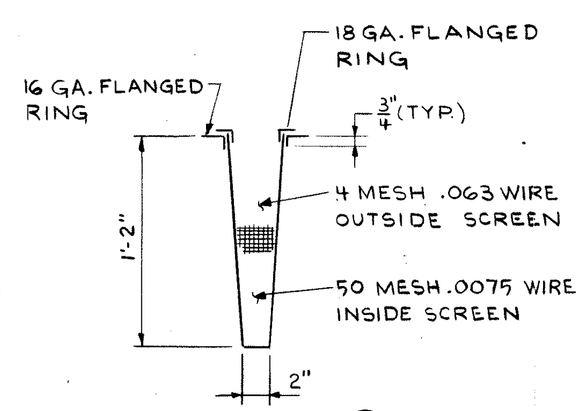

SECTION (B)

DETAIL (1)
NTS

NOTES

1. C.I.S.P = CAST IRON SOIL PIPE, ASTM-A-74
2. JOINTS = BELL & SPIGOT WITH RUBBER GASKET ASTM-C564

This drawing, including the information it contains, is the property of Dravo. It is submitted only in connection with the transaction to which it pertains and must not be used in any manner detrimental to the interests of Dravo. The drawing is not to be used, reproduced, published, or disclosed without written authorization of Dravo and must be returned upon request.

REV.	DESCRIPTION	MADE	CHKD	DATE	REV.	DESCRIPTION	MADE	CHKD	DATE	REV.	DESCRIPTION	MADE	CHKD	DATE	REV.	RELEASED FOR	APP.	DATE

DESIGNED	RODRIGUEZ	1-10-84
DRAWN	NEWINGHAM	1-10-84
CHECKED		
APPROVED		
APPROVED		
APPROVED		

Scale: AS NOTED

GEORGIA-PACIFIC
THE GROWTH COMPANY
PAINESVILLE OPERATIONS

NEW LABRATORY
CIVIL
SEWER PLAN

Dravo Engineers and Constructors

PITTSBURGH, PENNSYLVANIA

Dravo

Contract: 8124
Drawing Number: 800-201
Rev.: A

EC-101 2/80 32385

1/10 1/8 – 1/4 3/8 – 3/4 1/2 – 1