EROSION CONTROL PLAN & SCHEDULE

SILT FENCE TO BE INSTALLED PRIOR TO ANY EARTHWORK ACTIVITY IN LOCATION SHOWN ON PLANS, PER DETAIL

STONE SHALL BE INSTALLED IN FUTURE DRIVEWAY AREA 20 FEET WIDE AND 50 FEET LONG TO PREVENT VEHICLES FROM TRACKING SEDIMENT OFF THIS SITE. INGRESS AND EGRESS TO BE LIMITED TO THIS AREA ONLY

SEDIMENT CONTROL PRACTICES SHALL BE FUNCTIONAL THROUGHOUT ALL PHASES OF EARTH DISTURBING ACTIVITY. SETTLING FACILITIES, PERIMETER CONTROLS, AND OTHER PRACTICES INTENDED TO TRAP SEDIMENT SHALL BE IMPLEMENTED AS THE FIRST STEP OF GRADING AND WITHIN SEVEN (7) DAYS FROM THE START OF GRUBBING. THEY SHALL CONTINUE TO FUNCTION UNTIL THE DISTURBED AREA IS PERMANENTLY RESTABILIZED.

DISTURBED AREAS SHALL HAVE SOIL STABILIZATION WITHIN NO MORE THAN SEVEN (7) DAYS IF THEY ARE TO REMAIN DORMANT UNDISTURBED FOR MORE THAN THIRTY-FIVE (35) DAYS. PERMANENT OR TEMPORARY SOIL STABILIZATION SHALL BE APPLIED TO DISTURBED AREAS WITHIN NO MORE THAN SEVEN (7) DAYS AFTER FINAL GRADE IS REACHED ON ANY PORTION OF THE SITE, AND SHALL ALSO BE APPLIED WITHIN NO MORE THAN SEVEN (7) DAYS TO DISTURBED AREAS WHICH MAY NOT BE AT FINAL GRADE BUT WILL REMAIN DORMANT FOR LONGER THAN THIRTY-FIVE (35) DAYS

STABILIZATION OF CRITCAL AREAS WITHIN 50 FEET OF ANY STREAM OR WETLAND SHALL BE TEMPORARILY STABILIZED WITHIN TWO (2) DAYS OF DISTURBANCE IF AREA WILL REMAIN INACTIVE FOR FOURTEEN (14) DAYS OR LONGER. CONSTRUCTION VEHICLES SHALL AVOID STREAMS AND THEIR BUFFER AREAS. IF ANY ACTIVE DRAINAGE WAY MUST BE CROSSED BY CONSTRUCTION VEHICLES REPEATEDLY DURING CONSTRUCTION. AN APPROVED TEMPORARY STREAM CROSSING SHALL BE CONSTRUCTED

SOIL STOCKPILES SHALL BE STABILIZED OR PROTECTED TO PREVENT SOIL LOSS. STABILIZATION SHALL BE REQUIRED IF STOCKPILES ARE LOCATED WITHIN CRITICAL AREAS NEAR STREAM OR WETLANDS. OR IF DETERMINED BY THE ADMINISTRATOR THAT SEDIMENT FROM STOCKPILES WILL LEAVE THE SITE

SEDIMENT AND EROSION CONTROLS SHALL BE INSPECTED BY THE OWNER OR HIS/HER AGENT EVERY SEVEN (7) DAYS AND WITHIN 24 HOURS OF A 0.5" OR GREATER RAINFALL EVENT. A WRITTEN LOG OF THESE INSPECTIONS AND IMPROVEMENTS TO CONTROLS SHALL BE KEPT ON SITE. THESE INSPECTIONS SHALL INCLUDE THE DATE OF INSPECTION, NAME OF INSPECTOR, WEATHER CONDITIONS, THE ACTIONS TAKEN TO CORRECT ANY PROBLEMS AND THE DATE ACTIONS WERE TAKEN

MEASURES SHALL BE TAKEN TO PREVENT SOIL TRANSPORT ONTO SURFACES WHERE RUNOFF IS NOT CHECKED BY SEDIMENT CONTROLS, OR ONTO PUBLIC ROADS. WHERE SOIL IS TRANSPORTED ONTO A PUBLIC ROAD SURFACE. THE ROADS SHALL BE CLEANED THOROUGHLY AT THE END OF EACH DAY OR MORE FREQUENTLY AS NECESSARY. SOIL SHALL BE REMOVED FROM PAVED SURFACES BY SHOVELING OR SWEEPING. STREET WASHING SHALL BE ALLOWED ONLY AFTER MOST SEDIMENT HAS BEEN REMOVED BY SHOVELING OR SWEEPING

THE ABOVE SPECIFIED EROSION CONTROL STANDARDS ARE GENERAL GUIDELINES AND SHALL NOT LIMIT THE RIGHT OF THE COUNTY TO IMPOSE AT ANY TIME, ADDITIONAL, MORE STRINGENT REQUIREMENTS. NOR SHALL THE STANDARDS LIMIT THE RIGHT OF THE COUNTY TO WAIVE IN WRITING INDIVIDUAL REQUIREMENTS

PERMANENT SEEDING TO BE INSTALLED AFTER ALL CONSTRUCTION ACTIVITY IS COMPLETE

SEEDING AND MULCHING NOTES

SEDIMENT CONTROL SHALL BE ACCOMPLISHED BY SEEDING AND MULCHING IMMEDIATELY UPON COMPLETION OF EXCAVATION OF FILL AND FINISHED GRADING IN ACCORDANCE WITH ITEM NO 659 ODOT CONSTRUCTION AND MATERIAL SPECIFICATIONS OR AS DIRECTED BY THE ENGINEER

THE FOLLOWING MIXTURE SHALL BE USED FOR SEEDING IN ACCORDANCE WITH ODOT ITEM 659

KENTUCKY BLUE GRASS- 40%
CREEPING RED FESCUE- 40% 3#/1000 S.F.
PERENNIAL RYEGRASS- 20%
FERTILIZER- 20# 1000 S.F. 12-12-12
MULCH-STRAW 3 TONS ACRE

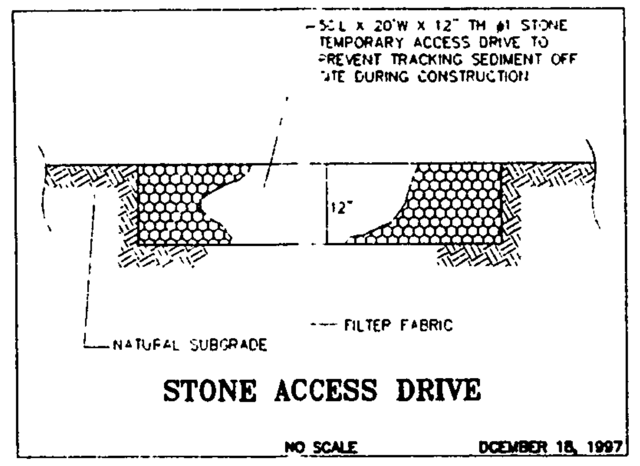

STONE ACCESS DRIVE

NO SCALE DCEMBER 18, 1997

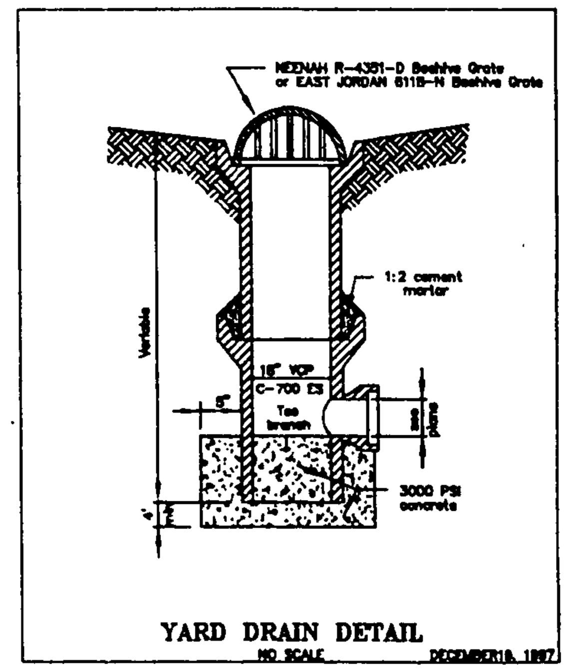

YARD DRAIN DETAIL

NO SCALE DECEMBER18, 1997

NOTES: DRIVE APRON AND SIDEWALK @ APRON TO BE 6" THICK CONCRETE;
-4' CONC. WALK TO BE 4" THICK
-DOWNSPOUTS TO BE OUTLETTED TO SPLASHBLOCKS
-Contractor To Verify Depth And Location Of Utility Connections;
-See Architect Plans For Complete House Dimensions.

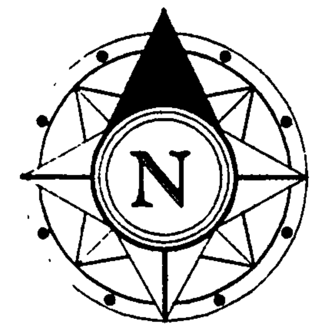

GRAPHIC SCALE

(IN FEET)
1 inch = 20 ft.

Basis of Bearings is the Subdivision Plat of Shorewoods Subdivision Phase No.1 Vol. 6 Page 27

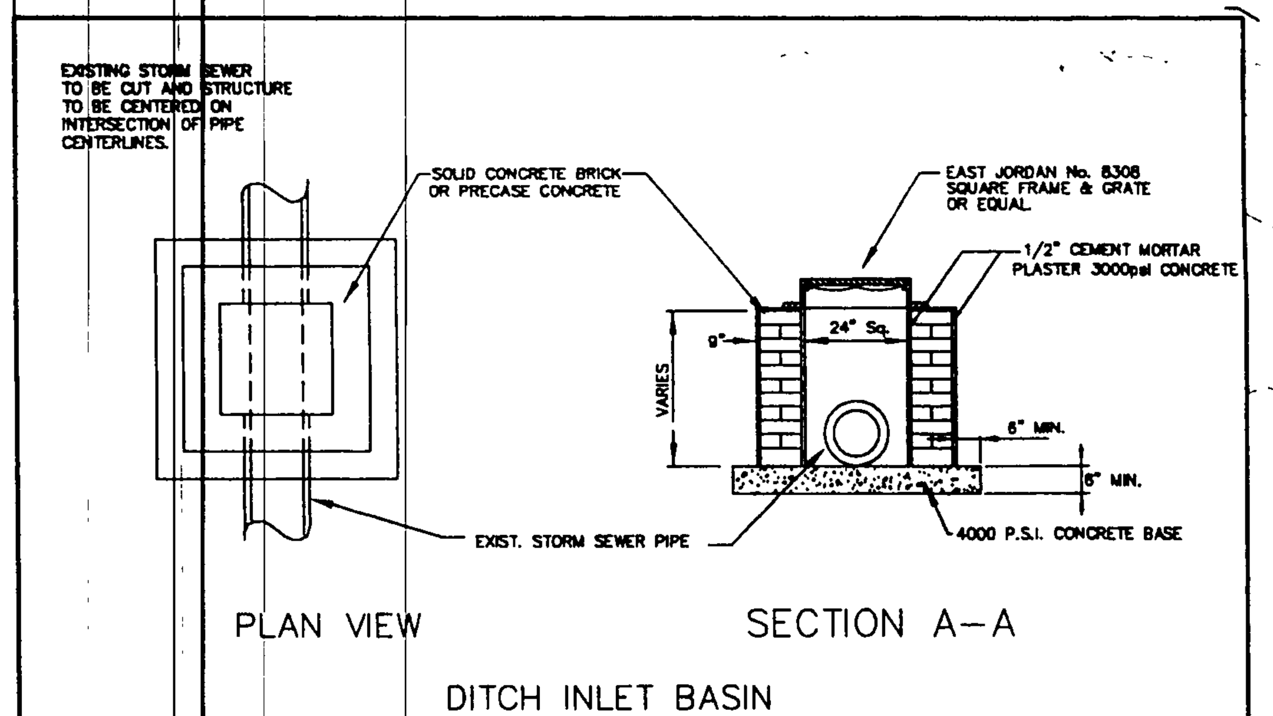

DITCH INLET BASIN

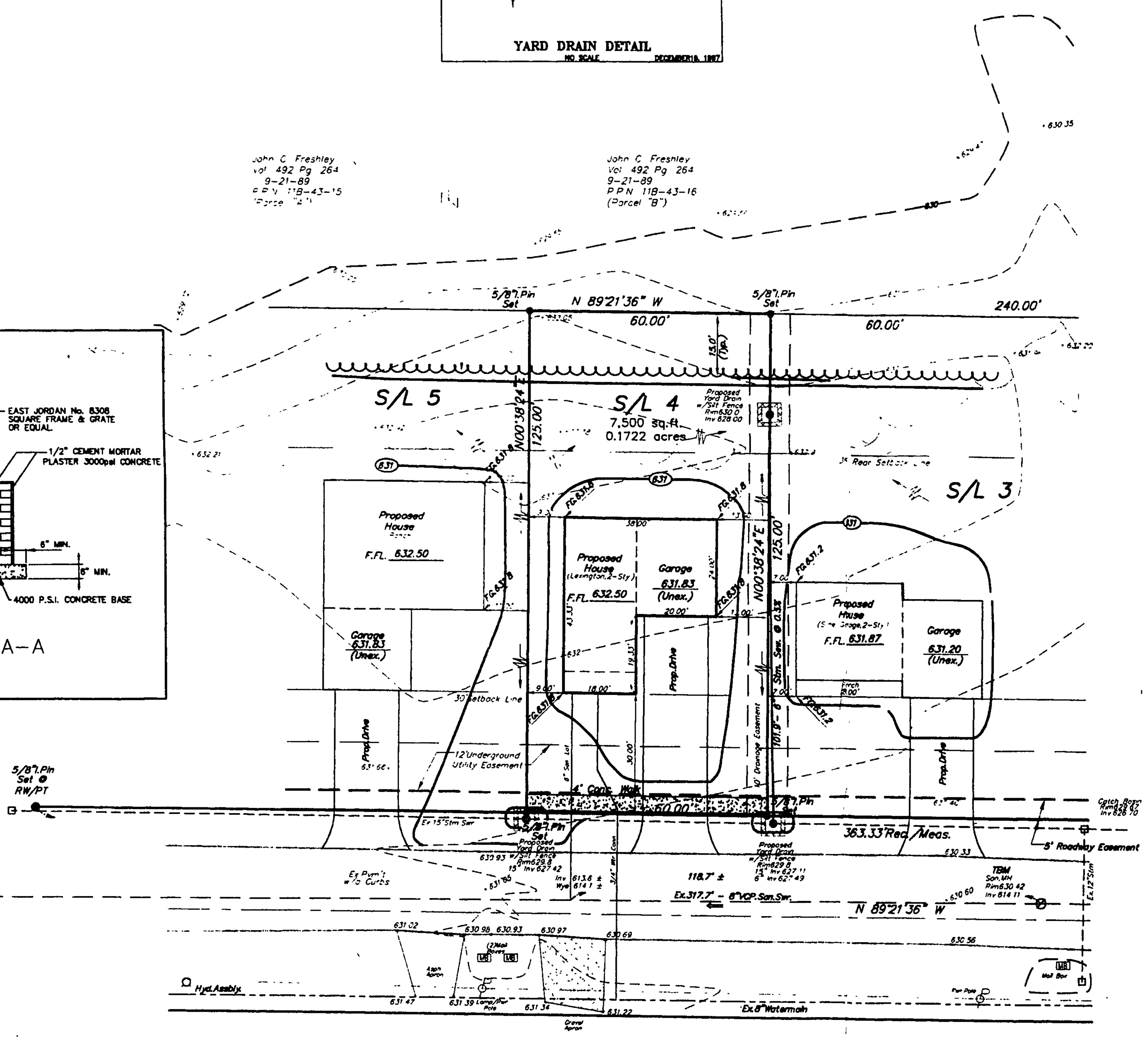

Kenilworth Avenue 50'

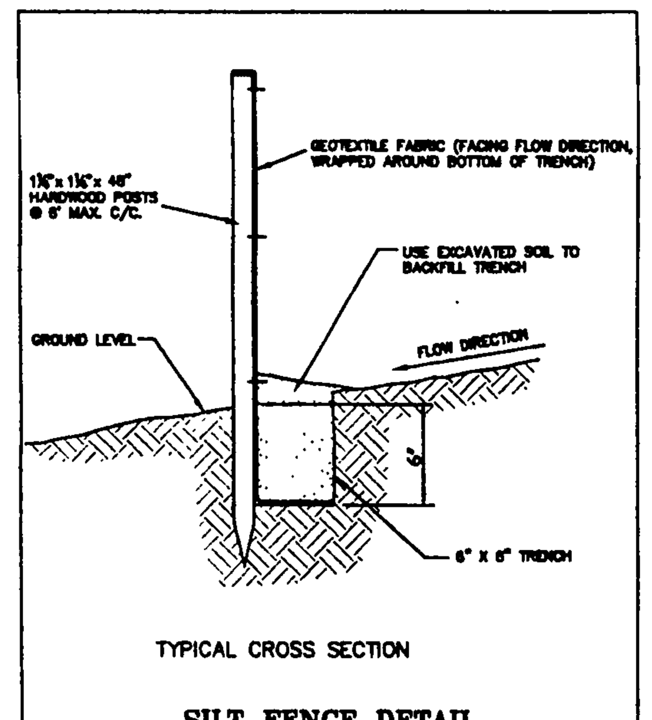

SILT FENCE DETAIL

NO SCALE DECEMBER 19, 1997

SILT FENCE. This sediment barrier utilizes standard strenght or extra strength synthetic filter fabrics. It is designed for situations in which only sheet or overland flows are expected. See diagram.

1. The height of a silt fence shall not exceed 36 inches (Higher fences may impound volumes of water sufficient to cause failure of the structure.)
2. The filter fabric shall be purchased in a continuous roll cut to the length of the barrier to avoid the use of joint. When joints are necessary, filter cloth shall be spliced together only at a support post, with a minimum 6-inch overlap, and securely sealed.
3. Posts shall be spaced a maximum of 10 feet apart at the barrier location and driven securely into the ground (minimum of 12 inches). When extra strength fabric is used without the wire support fence, Post spacing shall not exceed 6 feet.
4. A trench shall be excavated approximately 4 inches wide and 4 inches deep along the line of posts and upsloped from the barrier.
5. When standard strength filter fabric is used, a wire mesh support fence shall be fastened securely to the upslope side of the posts using heavy duty wire staples at least 1 inch long, tie wires of hog rings. The wire shall extened into the trench a minmum of 2 inches and shall not extend more than 36 inches above the original ground surface.
6. The standard strength filter fabric shall be staapled or wired to the fence and 8 inches of the fabric shall be extended into the trench. The fabric shall no exceed more than 36 inches above the original ground surface. Filter fabric shall not be stapled to the existing trees.
7. When extra strength filter fabric and closer post spacing are used, the wire mesh support fence may be eliminated. In such case, the filter fabric is stapled or wired directly to the posts with all other provisions of item No. 6 applying.
8. The trench shall be backfilled and soil compacted over the filter fabric.
9. Silt fences shall be removed when they have served their usefull purpose, but not before the upslope area has been permontly stabilized.

MAINTENANCE

1. Silt fences and filter barriers shall be inspected immediately after each rainfall and at least daily during prlonged rainfall. Any required repairs shall be made immediatly.
2. Should the fabric on a silt fence of filter barrier decompose or become ineffective prior to the end of the expeced usuable life and the barrier is still necessary, the fabric shall be replaced promptly.
3. Sediment deposits should be remove after each storm event. They must be removed when deposits reach approximatly one-half the height of the barrier.
4. Any sediment deposits remaining in place after the silt fence or filter barrier is no longer required shall be dressed to conform with the existing grade, prepared and seeded.

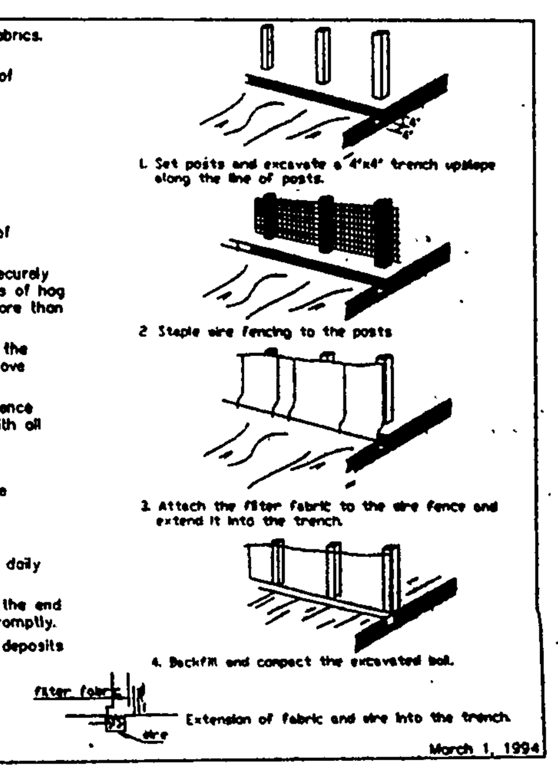

SILT FENCE

NO SCALE March 1, 1994

SITE PLAN

For : Lake County Community Development (CLIENT)

ADDRESS	STREET	CITY
101	Carmody Drive	Painesville

SUBLOT No.	SUBDIVISION NAME	VOL.	PAGE
4	Lake Terrace Estates Subd. Ph.1		

LOT	TRACT	CITY/TOWNSHIP	
		Painesville Twp.	OHIO

L.D.C. Inc. d.b.a.

Prepared By:
LAND DESIGN consultants
Civil Engineers and Surveyors
8585 EAST AVENUE • MENTOR, OHIO 44060
TELEPHONE 255-8463 354-6938 951-LAND

DESIGN CERTIFICATION

THIS PLAN WAS PREPARED BY ME, AND IS CORRECT TO THE BEST OF MY KNOWLEDGE AND BELIEF.

NAME

CHECK LIST

LOT DIMENSIONS & BEARINGS
TIE TO NEAREST STREET
SUBLOT No. (PARCEL No.)
SURROUNDING OWNERS
BUILDING DIMENSIONS
SETBACK, SIDEYARD, REARYARD
FINISHED GRADES
DRIVE & APRON TYPE, WIDTH, THICKNESS
SIDEWALK TYPE, WIDTH, THICKNESS
CULVERT TYPE, DIAM., LENGTH
WATER MAIN SIZE, LOCATION
SAN. SEWER SIZE, % GRADE, LOC.
SAN. MH. CAST. ELEV., INV. ELEV.
SAN. CONN. SIZE, % GRADE, LOC.
STORM SEWER SIZE, % GRADE, LOC.
STORM MH. CAST. ELEV., INV. ELEV.
PAV'T TYPE, GRADE, CURBS
GAS LINE LOC., SIZE
SEPTIC SYSTEM & DUPLICATION
WELL LOCATION & ISOLATION RADIUS

STATE OF OHIO ★ JAMES R. PECORARO 5368 REGISTERED ★ PROFESSIONAL SURVEYOR

STATE SEAL

"AS BUILT" CERTIFICATION

I HEREBY CERTIFY THAT THE CIRCLED INFORMATION IS EXISTING AS OBTAINED ON THE SITE ______ AND IS CORRECT TO THE BEST OF MY KNOWLEDGE AND BELIEF.

NAME

LEGEND

STORM MANHOLE
SANITARY MANHOLE
EXISTING CONTOURS
PROPOSED CONTOURS
EXIST. ELEV. 100.0
F.G.100.0 = PROP. ELEV.
DIRECTION OF SURFACE DRAINAGE

DRAWN BY	SCALE
Jrp/S'Plan4	1"=20'
CHK'D BY/FIELD	DATE
Rat	Dec, 2000
1 Site & Grade	12/11/00
2	

ACCEPTED: ______ CLIENT ______ DATE

BENCHMARK:

TBM: RIM OF SANITARY MANHOLE AS SHOWN ELEVATION = 630.42

Grading Plan Approved as shown and/or noted
JAMES R. GILLS, P.E.
Lake County Engineer
By ______ Date 5/8/01

APPROVED
PAINESVILLE TOWNSHIP ZONING DEPARTMENT
2001-116

EXISTING UNDERGROUND UTILITIES NOTE:
THE SIZE & LOCATION, BOTH HORIZONTAL AND VERTICAL, OF THE UNDERGROUND UTILITIES SHOWN HEREON, HAVE BEEN OBTAINED BY A SEARCH OF AVAILABLE RECORDS. VERIFICATION BY FIELD OBSERVATION HAS BEEN CONDUCTED WHERE PRACTICAL. HOWEVER, LDC INC. DOES NOT GUARANTEE THE COMPLETENESS NOR ACCURACY THEREOF.

2 WORKING DAYS BEFORE YOU DIG
CALL TOLL FREE 800-362-2764
OHIO UTILITIES PROTECTION SERVICE

PRINTED
DEC 12 2000
LDC, INC.

S/L 4
DWG. NAME
Lakec2-9901