Erosion and Sediment Control Schedule

Ingress–Egress
A stone access drive complete with under lying geo–textile fabric (20 feet wide and 50 feet long) for ingress and egress at the site shall be installed. This drive shall be the only entrance and exit to the site.

Silt Fence
All silt fence shall be installed prior to any earthwork activities at the site in the locations shown on the site plan as well as along the front of any lot that slopes towards the street.

Temporary Seeding
Disturbed areas of the site that are to remain idle for more than twenty–one (21) days shall be properly seeded and straw mulched within seven (7) days of completion of initial grading.
Temporary seeding and mulching of a thirty (30) foot strip of the entire front of the lot shall be maintained on the site once initial grading is complete.

Stabilization of critical areas within fifty (50) feet of any stream or wetland shall be complete within two (2) days of the disturbance if the site is to remain inactive for longer than fourteen (14) days.

Mulching
Straw–mulch shall be applied at a rate of 1 bale per every ten (10) feet of curb, at a width of thirty (30) feet of the entire length of the lot. Wood chips may also be used but must be spread at a minimum depth of four inches over the thirty–foot width and must be accompanied by a properly installed silt fence.

Maintenance
Erosion and sediment controls shall be inspected every seven (7) days or within 24 hours of a 0.5" or greater rainfall event. Necessary repairs shall be made at this time.

Note:
All erosion and sediment control specifications, applications, and timetables are based on the descriptions and standards of The Ohio Department of Natural Resources "Rainwater and Land Development Manual" and can be found in the Lake County Erosion and Sediment Control Rules as adopted December 21, 1999

The specified erosion and sediment control standards are the general guidelines and shall not limit the right of the county to impose, at any time, additional, more stringent requirements. Nor shall the standards limit the right of the county to waive, in writing, individual requirements.

PERMANENT SEEDING SPECIFICATIONS

Seed Mix	lb./ac.	lb. / 1000sqft	Notes:
General Use			
Creeping Red Fescue	20–40	1/2–1	
Domestic Ryegrass	10–20	1/4–1/2	
Kentucky Bluegrass	10–20	1/4–1/2	
Tall Fescue	40	1	
Dwarf Fescue	40	1	
Steep Banks or Cut Slopes			
Tall Fescue	40	1	
Crown Vetch	10	1/4	Do not seed later than August.
Tall Fescue	20	1/2	
Flat Pea	20	1/2	Do not seed later than August.
Tall Fescue	20	1/2	
Road Ditches and Swales			
Tall Fescue	40	1	
Dwarf Fescue	90	2 1/4	
Kentucky Bluegrass	5		
Lawns			
Kentucky Bluegrass	60	1 1/2	
Perennial Ryegrass	60	1 1/2	
Kentucky Bluegrass	60	1 1/2	For Shaded areas.
Creeping Red Fescue	60	1 1/2	

Note: other approved seed species may be substituted.

Mulching

Straw mulch shall be unrotted small–grain straw applied at the rate of 2 tons/ac. or 90 lb./1,000 sq. ft. (two to three bales). The mulch shall be spread uniformly by hand or mechanically so the soil surface is covered. For uniform distribution of hand–spread mulch, divide area into approximately 1,000 sq. ft. sections and spread two 45–lb. bales of straw in each section.

Temporary Seeding Specifications

Seeding Dates	Species	Lb. / 1000sqft	Per Acre
March 1 to August 15	Oats Tall Fescue Annual Ryegrass	3 1 1	4 bushel 40 lb. 40 lb.
	Perennial Ryegrass Tall Fescue Annual Ryegrass	1 1 1	40 lb. 40 lb. 40 lb.
August 16 to November 1	Rye Tall Fescue Annual Ryegrass	1 1 1	2 bushel 40 lb. 40 lb.
	Wheat Tall Fescue Annual Ryegrass	1 1 1	40 lb. 40 lb. 40 lb.
	Perennial Ryegrass Tall Fescue Annual Ryegrass	1 1 1	40 lb. 40 lb. 40 lb.
November 1 to Spring Seeding	Use mulch only, sodding practices or dormant seeding		

Note: other approved seed species may be substituted.

NOTES
–See Architect Plans for Complete House Dimensions

–Utility Connections Per Plan; Contractor To Verify Location and Depth of All laterals. Verify Depth of Sanitary Connection to Verify Gravity Basement Service (Where Basements Are Constructed)

–For Slab Units, Contractor Shall Provide 22.5°Vertical Bends to Raise Sanitary Lateral to Proposed Grade @ Building (Approx. 4'–6" Below Finished Floor.)

–Verify Downspout Locations with Owner. Downspouts to Splashblock.

CURVE TABLE

CURVE	LENGTH	RADIUS	TANGENT	CHORD	BEARING	DELTA
C2	90.84	50.00	64.11	78.85	N18°05'12"E	104°05'47"
C13	20.80	50.00	10.55	20.65	S63°48'50"E	23°50'04"

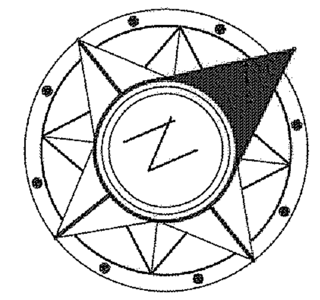

GRAPHIC SCALE

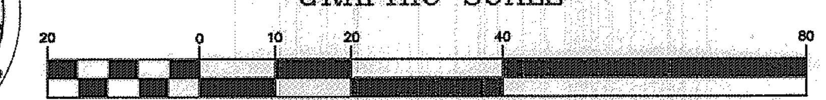

(IN FEET)
1 inch = 20 ft.

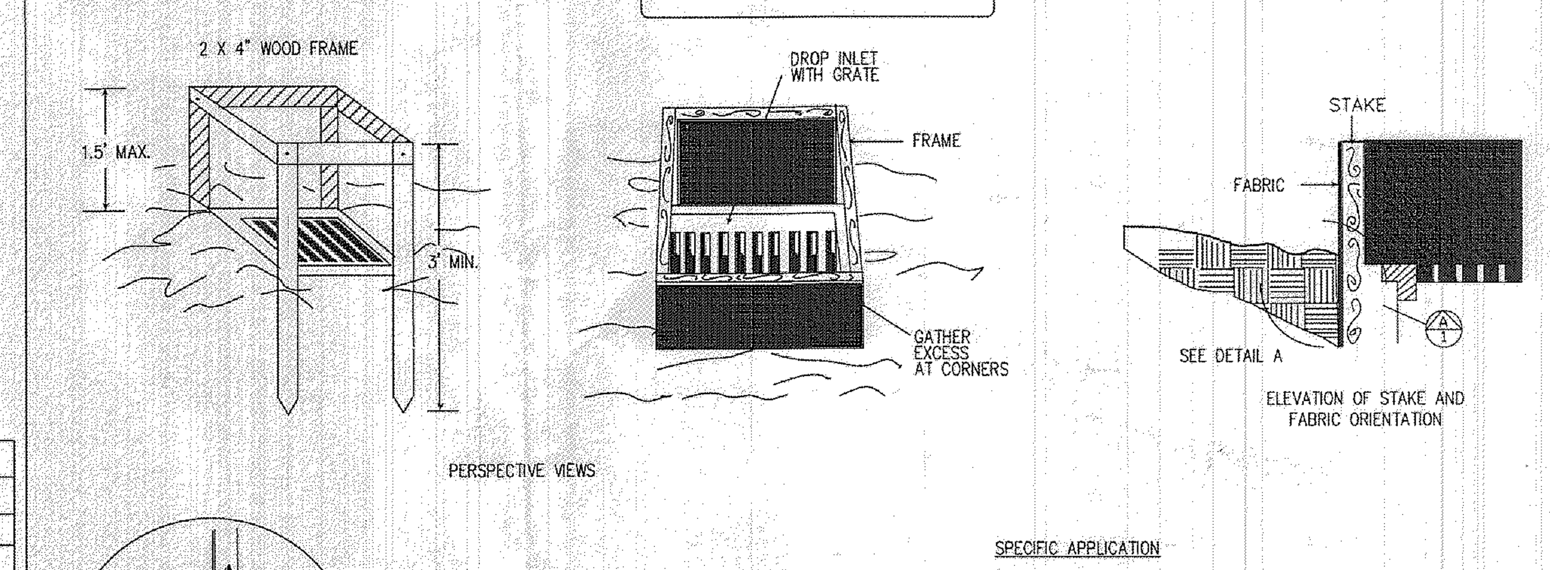

SPECIFIC APPLICATION

THIS METHOD OF INLET PROTECTION IS APPLICABLE WHERE THE INLET DRAINS A RELATIVELY FLAT AREA (SLOPE NO GREATER THAN 5%) WHERE THE INLET SHEET OR OVERLAND FLOWS (NOT EXCEEDING 1 C.F.S.) ARE TYPICAL. THE METHOD SHALL NOT APPLY TO INLETS RECEIVING CONCENTRATED FLOWS, SUCH AS IN STREET OR HIGHWAY MEDIANS.

SOURCE: N.C. Erosion and Sediment Control Planning and Design Manual, 1988

\STORM & EROSION DETAILS\SILT FENCE DROP INLET PROTECTION DETAIL

STONE ACCESS DRIVE
NO SCALE

September 19, 2003

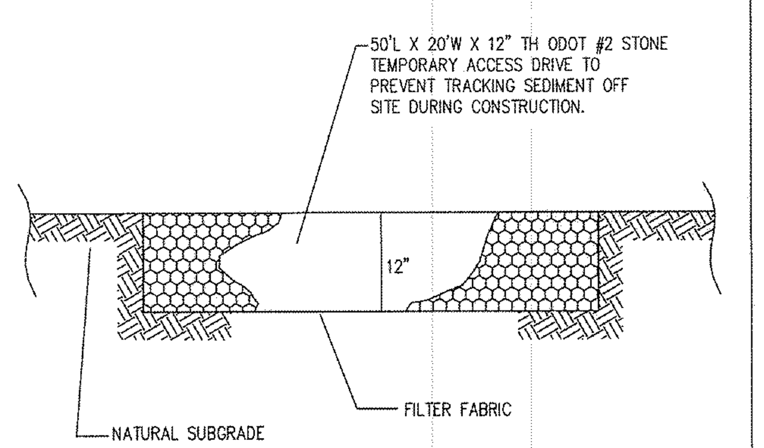

\STORM & EROSION DETAILS\STONE ACCESS DRIVE DETAIL

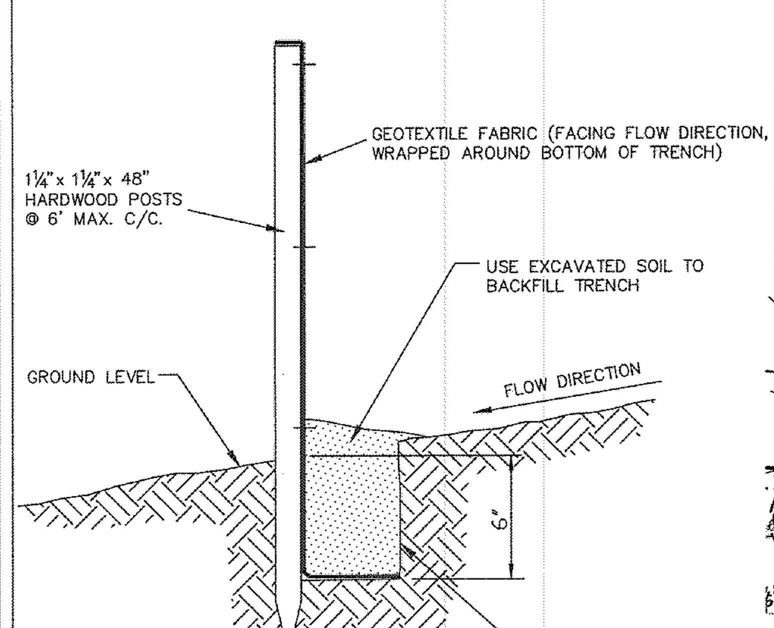

TYPICAL CROSS SECTION

SILT FENCE DETAIL
NO SCALE DECEMBER 19, 1997

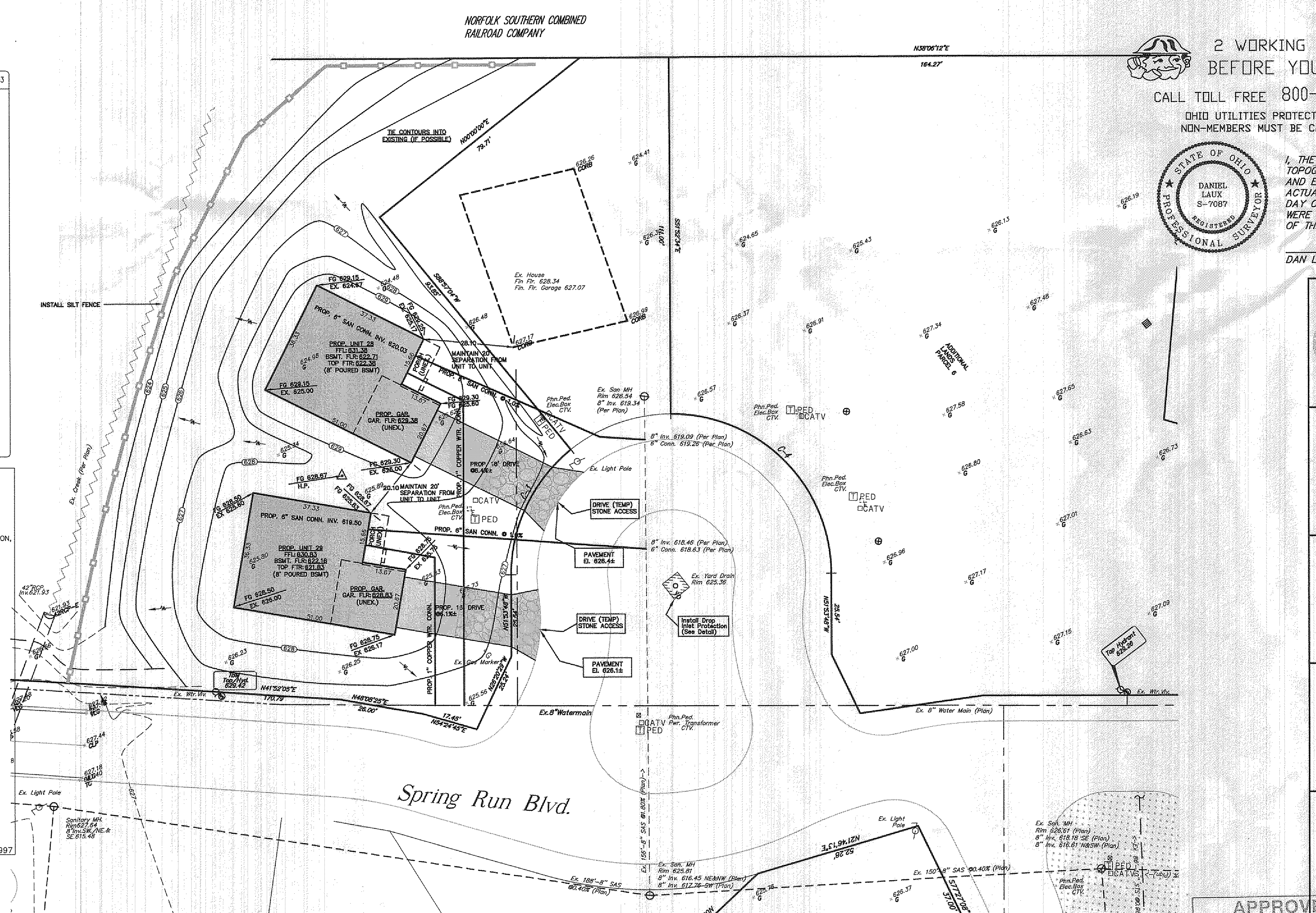

2 WORKING DAYS BEFORE YOU DIG

CALL TOLL FREE 800-362-2764

OHIO UTILITIES PROTECTION SERVICE
NON-MEMBERS MUST BE CALLED DIRECT

EXISTING UNDERGROUND UTILITIES NOTE:
THE SIZE AND LOCATION, BOTH HORIZONTAL AND VERTICAL OF THE UNDERGROUND UTILITIES SHOWN HEREON, HAVE BEEN OBTAINED BY A SEARCH OF AVAILABLE RECORDS. VERIFICATION BY FIELD OBSERVATION HAS BEEN CONDUCTED WHERE PRACTICAL. HOWEVER, POLARIS ENGINEERING & SURVEYING, INC. DOES NOT GUARANTEE THE COMPLETENESS NOR ACCURACY THEREOF.

STATE OF OHIO — DANIEL LAUX S-7087 — REGISTERED PROFESSIONAL SURVEYOR

I, THE UNDERSIGNED, HEREBY CERTIFY THAT THIS TOPOGRAPHY, INDICATED BY 6", 1', OR 2' CONTOURS, AND ELEVATIONS SHOWN HEREON, REPRESENT AN ACTUAL FIELD SURVEY MADE BY ME ON THE 23rd. DAY OF February, 2011, AND THAT THE ELEVATIONS WERE TAKEN AT APPROPRIATE INTERVALS AND THAT AS OF THAT DATE, THEY EXISTED AS INDICATED HEREON.

DAN LAUX, P.S. #7087

Prepared For:
CANTERBURY HOMES
29899 Smithfield Rd.
Orange, OH 44022
PHONE: (440) 527–4361
FAX: (216) 464–6383
CONTACT: Ron Klein

polaris Engineering & Surveying

POLARIS ENGINEERING & SURVEYING, INC.
34600 CHARDON ROAD – SUITE D
WILLOUGHBY HILLS, OHIO 44094
(440) 944–4433 (440) 944–3722 (Fax)
www.polaris–es.com

DESIGN CERTIFICATION

THIS PLAN WAS PREPARED BY ME, AND IS CORRECT TO THE BEST OF MY KNOWLEDGE AND BELIEF.

Charles W. Szucs 7/18/13
NAME DATE

BENCHMARK:

B.M. = T.B.M Set On Top Of Hydrant
Located As Noted
Elevation 629.42

STATE OF OHIO — CHARLES W. SZUCS E-56526 — REGISTERED PROFESSIONAL ENGINEER
STATE SEAL

"AS–BUILT" CERTIFICATION

I HEREBY CERTIFY THAT THE CIRCLED INFORMATION IS EXISTING AS OBTAINED ON THE SITE _______ AND IS CORRECT TO THE BEST OF MY KNOWLEDGE AND BELIEF.

NAME DATE

UNIT 29

THE BROOKS CONDOMINIUMS

Painesville Twp. – Lake County – Ohio

CONTRACT No. 11014

DATE: 7/18/13

SCALE: HOR. 1"=20'
VERT.

FILENAME: Siteplan 28 & 29

APPROVED
PERMIT # 20130137 DATE 7-19-13
Painesville Township Zoning Inspector

Stormwater Management Plan
Approved as shown and/or noted *
JAMES R. GILLS, P.E.
County Drainage Engineer
By L.S. Date 7/29/13

* SUMP PUMP REQUIRED FOR FOOTER DRAINS