Specifications
for
Silt Fence

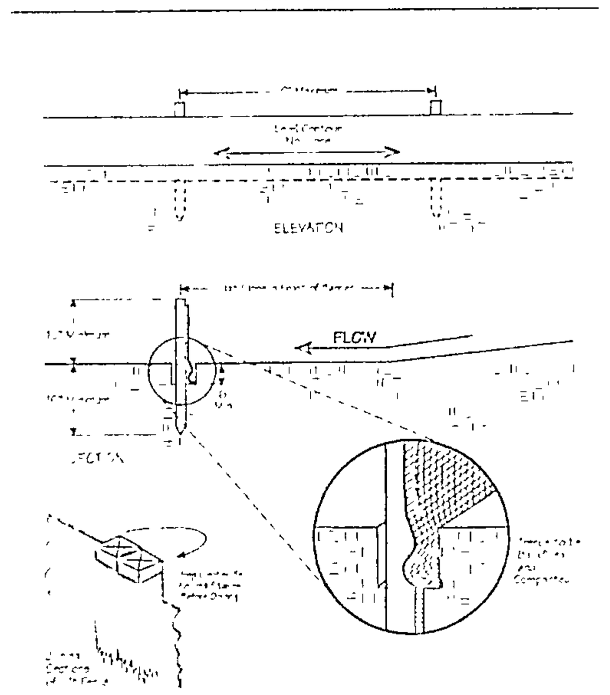

SILT FENCE - PAGE 120

Specifications
for
Temporary Seeding

Temporary Seeding Species Selection			
Seeding Dates	Species	Lb./1,000 ft.²	Per Ac
March 1 to August 15	Oats Tall Fescue Annual Ryegrass	3 1 1	4 bushel 40 lb 40 lb
	Perennial Ryegrass Tall Fescue Annual Ryegrass	1 1 1	40 lb 40 lb 40 lb
August 16 to November 1	Rye Tall Fescue Annual Ryegrass	3 1 1	2 bushel 40 lb 40 lb
	Wheat Tall Fescue Annual Ryegrass	3 1 1	2 bushel 40 lb 40 lb
	Perennial Ryegrass Tall Fescue Annual Ryegrass	1 1 1	40 lb 40 lb 40 lb
November 1 to Spring Seeding	Use mulch only, sodding practices or dormant seeding		

Note: Other approved seed species may be substituted.

1. Structural erosion and sediment control practices such as diversions and sediment traps shall be installed and stabilized with temporary seeding prior to grading the rest of the construction site.
2. Temporary seed shall be applied between construction operations on soil that will not be graded or reworked for 15 days or more. These idle areas should be seeded as soon as possible after grading or shall be seeded within 7 days. Several applications of temporary seeding are necessary on typical construction projects.
3. The seedbed should be pulverized and loose to ensure the success of establishing vegetation. However, temporary seeding shall not be postponed if ideal seedbed preparation is not possible.
4. Soil Amendments: Applications of temporary vegetation shall establish adequate stands of vegetation which may require the use of soil amendments. Soil tests should be taken on the site to predict the need for lime and fertilizer.
5. Seeding Method: Seed shall be applied uniformly with a cyclone seeder, drill, cultipacker seeder, or hydroseeder. When feasible, seed that has been broadcast shall be covered by raking or dragging and then lightly tamped into place using a roller or cultipacker. If hydroseeding is used, the seed and fertilizer will be mixed on site and the seeding shall be done immediately and without interruption.

TEMPORARY SEEDING - PAGE 174

Specifications
for
Construction Entrance

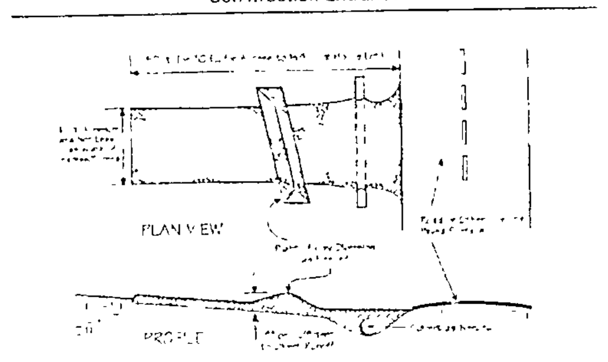

1. Stone Size—Two inch stone shall be used or recycled concrete equivalent.
2. Length—The construction entrance shall be as long as required to stabilize high traffic areas but not less than 50 ft. (except on single residence lot where a 30-ft. minimum length applies).
3. Thickness—The stone layer shall be at least 6 in. thick.
4. Width—The entrance shall be at least 10 ft. wide, but not less than the full width at points where ingress or egress occurs.
5. Bedding—A geotextile shall be placed over the entire area prior to placing stone. It shall have a Grab Tensile Strength of at least 200 lb. and a Mullen Burst Strength of at least 190 lb.
6. Culvert—A pipe or culvert shall be constructed under the entrance if needed to prevent surface water flowing across the entrance from being directed out onto paved surfaces.
7. Water Bar—A water bar shall be constructed as part of the construction entrance if needed to prevent surface runoff from flowing the length of the construction entrance and out onto paved surfaces.
8. Maintenance—Top dressing of additional stone shall be applied as conditions demand. Mud spilled, dropped, washed or tracked onto public roads, or any surface where runoff is not checked by sediment controls, shall be removed immediately. Removal shall be accomplished by scraping or sweeping.
9. Construction entrances shall not be relied upon to remove mud from vehicles and prevent off-site tracking. Vehicles that enter and leave the construction site shall be restricted from muddy areas.

CONSTRUCTION ENTRANCE - PG 155

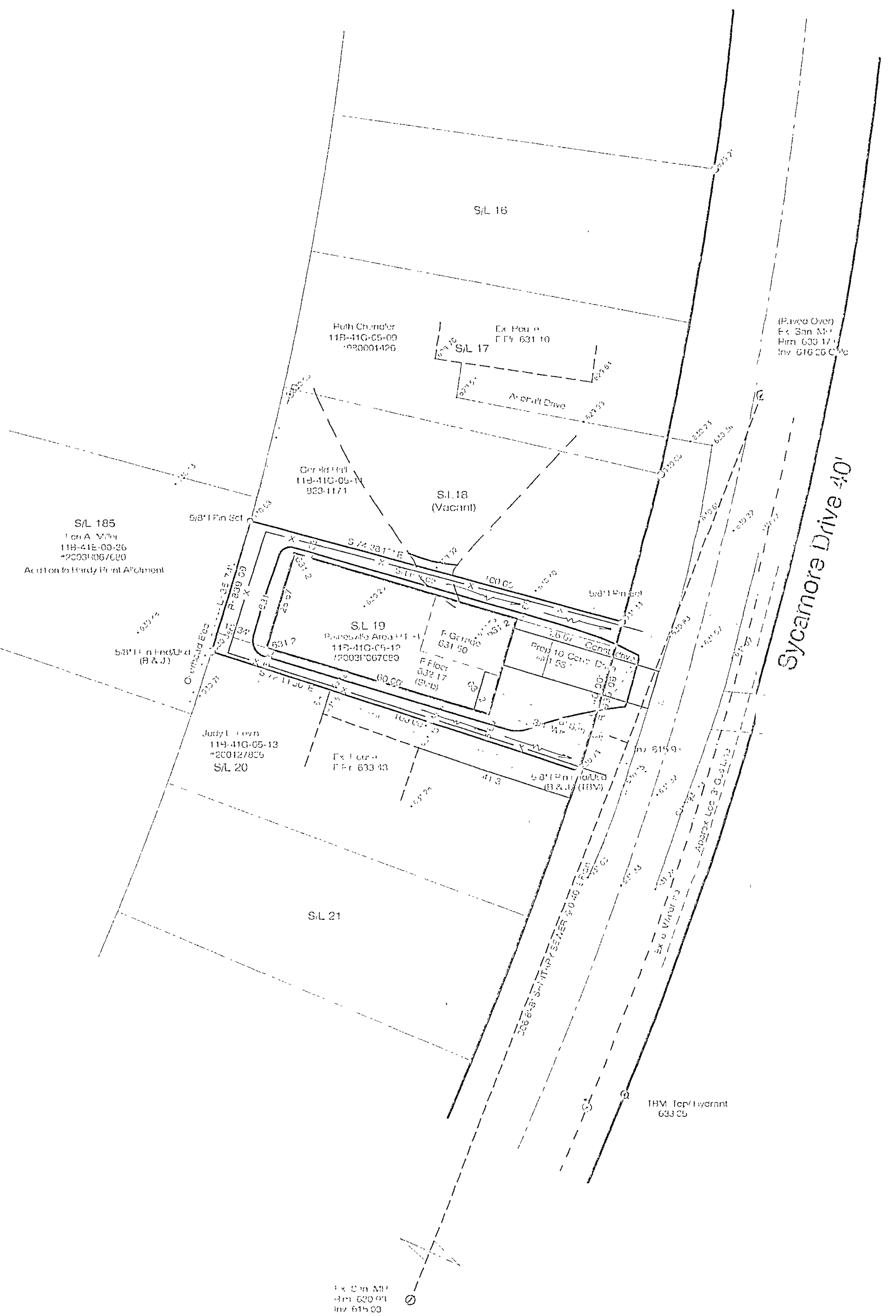

NOTE: THE CONTRACTOR/BUILDER SHALL NOTIFY THE APPROVING ENGINEER IF GROUNDWATER IS OBSERVED DURING THE EXCAVATION OF THE BASEMENT
- Contractor To Verify Depth And Location Of Utility Connections.
- See Architect Plans For Complete House Dimensions

I, THE UNDERSIGNED, HEREBY CERTIFY THAT THE TOPOGRAPHY INDICATED BY 0.5, 1, OR 2 CONTOURS AND ELEVATIONS SHOWN HEREON IS FROM AN ACTUAL FIELD SURVEY MADE BY ME ON THE 8th DAY OF March, 2005 AND THAT THE ELEVATIONS WERE TAKEN AT APPROPRIATE INTERVALS AND THAT AS OF THAT DATE THEY EXISTED AS INDICATED HEREON.

James R. Pegoraro Jr. P.S. 8150

Abbreviated Site Plan - Erosion and Sediment Control Notes (Individual Homesites) (5-13-05)

Ingress-Egress
A stone access drive complete with under lying geo-textile fabric (20 feet wide and 50 feet long) for ingress and egress at the site shall be installed. This drive shall be the only entrance and exit to the site.

Silt Fence
All silt fence shall be installed prior to any earthwork activities at the site in the locations shown on the site plan as well as along the front of any lot that slopes towards the street.

Temporary Seeding
Disturbed areas of the site that are to remain idle for more than Twenty-one (21) days shall be properly seeded and straw mulched within seven (7) days of completion of initial grading. Temporary seeding and mulching of a thirty (30) foot strip of the entire front of the lot shall be maintained on the site once initial grading is complete.

Stabilization of critical areas within fifty (50) feet of any stream or wetland shall be complete within two (2) days of the disturbance if the site is to remain inactive for longer than fourteen (14) days.

Mulching
Straw-mulch shall be applied at a rate of 1 bale per every ten (10) feet of curb, at a width of thirty (30) feet of the entire length of the lot. *Wood chips* may also be used but must be spread at a minimum depth of four inches over the thirty-foot width and must be accompanied by a properly installed silt fence.

Maintenance
Erosion and sediment controls shall be inspected every seven (7) days or within 24 hours of a 0.5" or greater rainfall event.
Necessary repairs shall be made at this time.

Note:
All erosion and sediment control specifications, applications, and tree tables are based of the descriptions and standards of The Ohio Department of Natural Resources "Rainwater and Land Development Manual" and can be found in the Lake County Erosion and Sediment Control Rules as adopted December 21, 1999.

The specified erosion and sediment control standards are general guidelines and shall not limit the right of the county to impose, at any time, additional, more stringent requirements. Nor shall the standards limit the right of the county to

EXISTING UNDERGROUND UTILITIES NOTE
THE SIZE & LOCATION, BOTH HORIZONTAL AND VERTICAL, OF THE UNDERGROUND UTILITIES SHOWN HEREON HAVE BEEN OBTAINED BY A SEARCH OF AVAILABLE RECORDS. VERIFICATION BY FIELD OBSERVATION HAS BEEN CONDUCTED WHERE PRACTICAL. HOWEVER, LDC INC. DOES NOT GUARANTEE THE COMPLETENESS NOR ACCURACY THEREOF.

2 WORKING DAYS BEFORE YOU DIG
CALL TOLL FREE 800-362-2764
OHIO UTILITIES PROTECTION SERVICE

SITE PLAN

For: Painesville Area Habitat for Humanity		
CLIENT		
87 Chester Street		Painesville
ADDRESS STREET		CITY
19/ Block 10	Painesville on the Lake	D 13
SUBLOT No.	SUBDIVISION NAME	VOL. PAGE
2	2	Painesville Twp. OHIO
LOT	TRACT	CITY/TOWNSHIP

Prepared By
LAND DESIGN consultants
Civil Engineers and Surveyors
9025 EAST AVENUE MENTOR OHIO 44060
TELEPHONE 255-3165 254-LDC-05 LAND

DESIGN CERTIFICATION
THIS PLAN WAS PREPARED BY ME, AND IS CORRECT TO THE BEST OF MY KNOWLEDGE AND BELIEF.

NAME 9-13-05

CHECK LIST
LOT DIMENSIONS & BEARINGS
TIE TO NEAREST STREET
SUBLOT No. (PARCEL No.)
SURROUNDING OWNERS
BUILDING DIMENSIONS
SETBACK, SIDEYARD, REARYARD
FINISHED GRADES
DRIVE & APRON TYPE, WIDTH, THICKNESS
SIDEWALK TYPE, WIDTH, THICKNESS
CULVERT TYPE, DIAM., LENGTH
WATER MAIN SIZE, LOCATION
SAN. SEWER SIZE, % GRADE, LOC.
SAN. MH. CAST. ELEV., INV. ELEV.
SAN. CONN. SIZE, % GRADE, LOC.
STORM SEWER SIZE, % GRADE, LOC.
STORM MH. CAST. ELEV., INV. ELEV.
PAV'T TYPE, GRADE, CURBS
GAS LINE LOC., SIZE
SEPTIC SYSTEM & DUPLICATION
WELL LOCATION & ISOLATION RADIUS

STATE OF OHIO
JAMES R. PEGORARO, JR. S-8150
PROFESSIONAL SURVEYOR
STATE SEAL

"AS BUILT" CERTIFICATION
I HEREBY CERTIFY THAT THE CIRCLED INFORMATION IS EXISTING AS OBTAINED ON THE SITE ______ AND IS CORRECT TO THE BEST OF MY KNOWLEDGE AND BELIEF.

NAME

LEGEND
STORM MANHOLE
SANITARY MANHOLE
EXISTING CONTOURS
PROPOSED CONTOURS
EXIST. ELEV. 100.0
F.G. 100.0 = PROP. ELEV.
DIRECTION OF SURFACE DRAINAGE

DRAWN BY	SCALE
Jrp	1"=20'
CHK'D BY/FIELD	DATE
	9/05
1	Site & Grade 3/18/05
2	REV HSL 9/10/05

ACCEPTED: ______ CLIENT ______ DATE

BENCHMARK:
TBM: Top/ Babcock & Jones Pin shown 630.76

APPROVED
Painesville Township
Zoning Department
2005 317
9/13/05

Stormwater Management Plan
Approved as shown and/or noted
JAMES R. GILLS, P.E.
County Drainage Engineer
By ______ Date 9/20/05

DWG. NAME
Habif1-0502-19