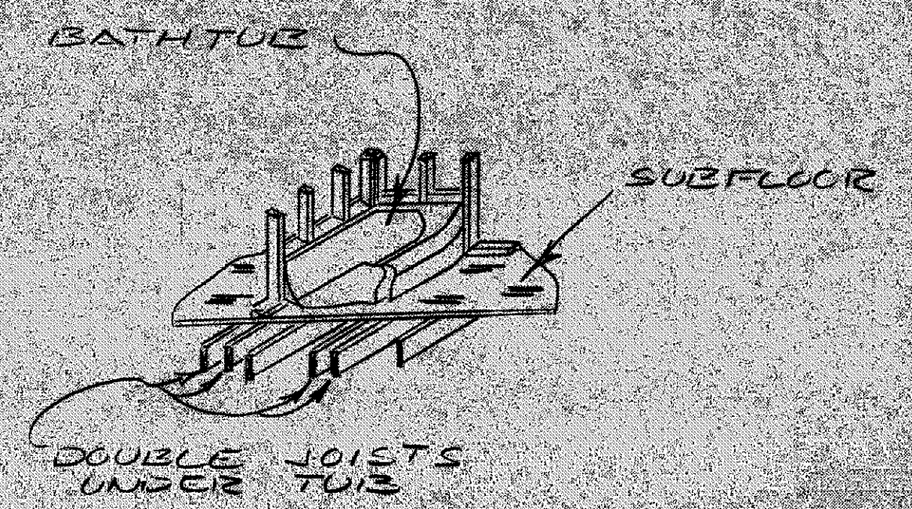

DOUBLE JOISTS
UNDER BATHTUB

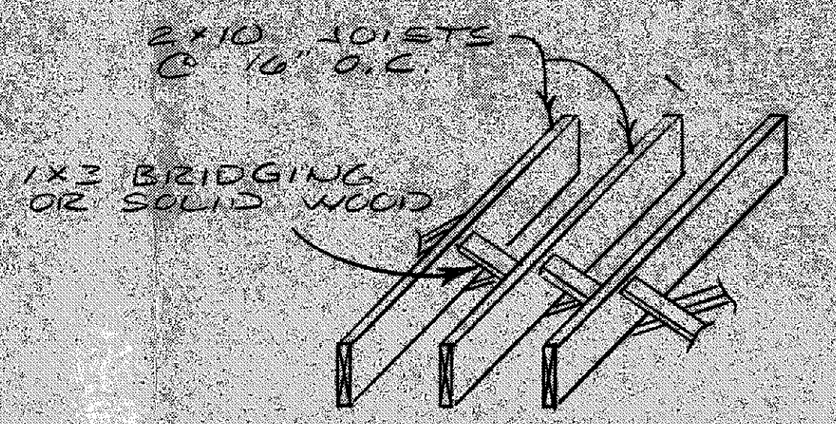

1×3 CROSS BRIDGING FOR JOIST SPANS OVER 7'-0"

DOUBLE ROW OF BRIDGING FOR JOIST SPANS OVER 14'-0"

CROSS BRIDGING

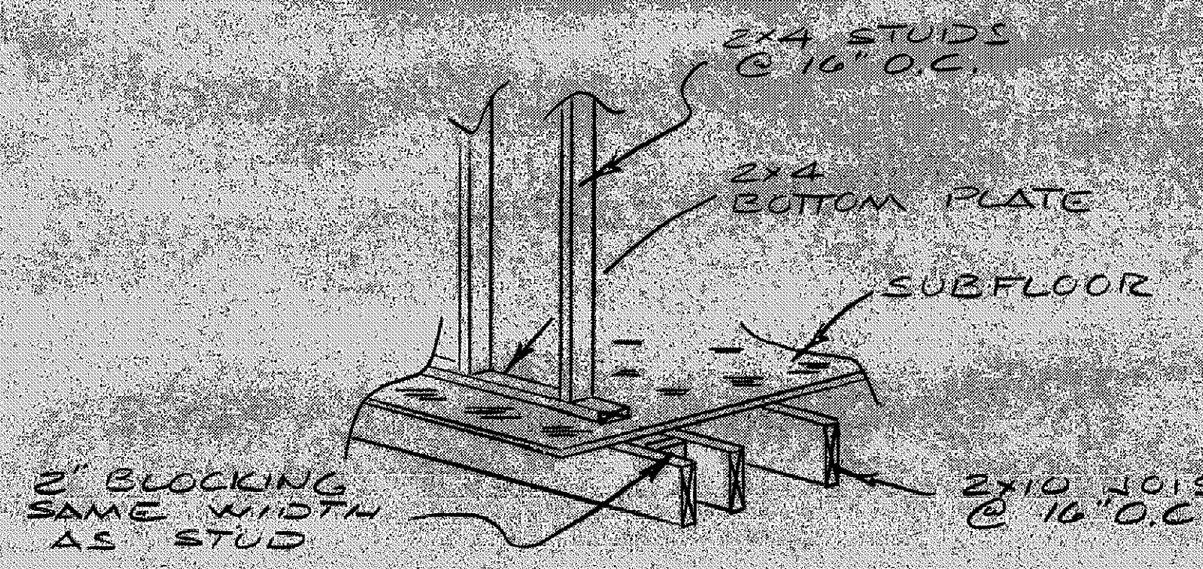

DOUBLE JOISTS UNDER
PARALLEL PARTITIONS

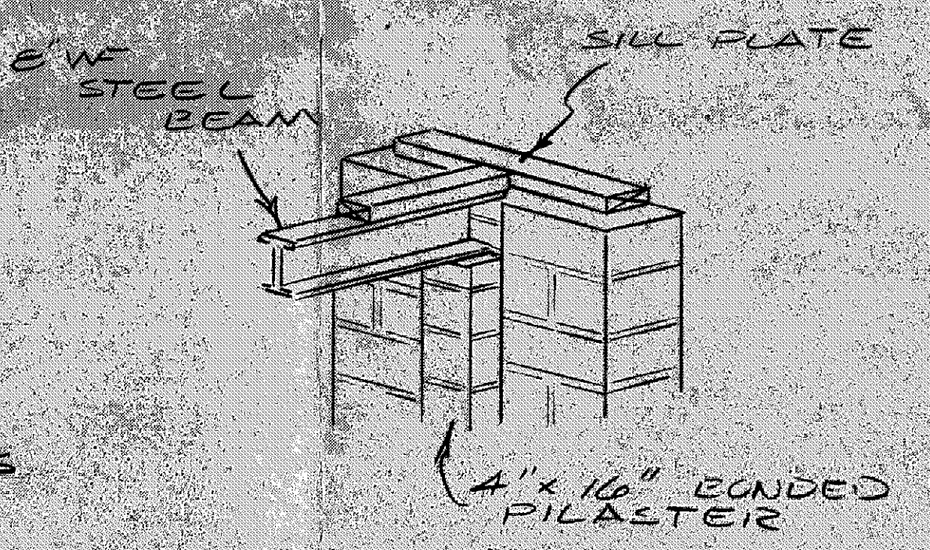

STEEL BEAM
& PILASTER

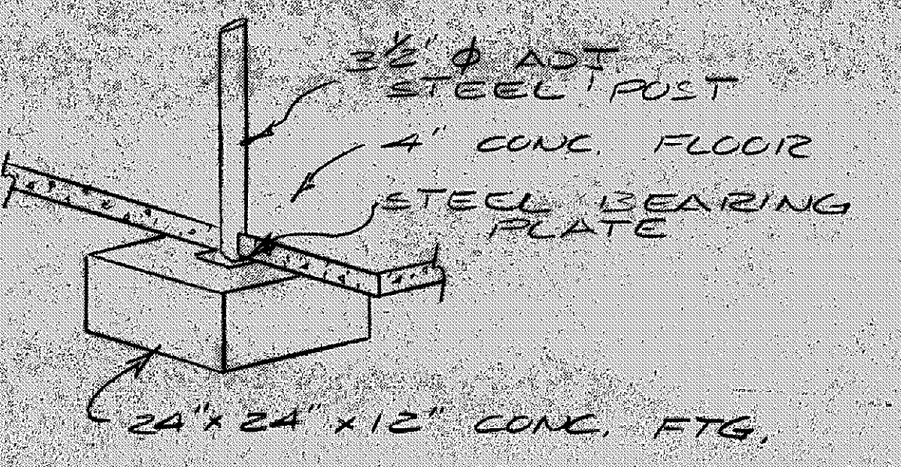

BASEMENT
STEEL POST