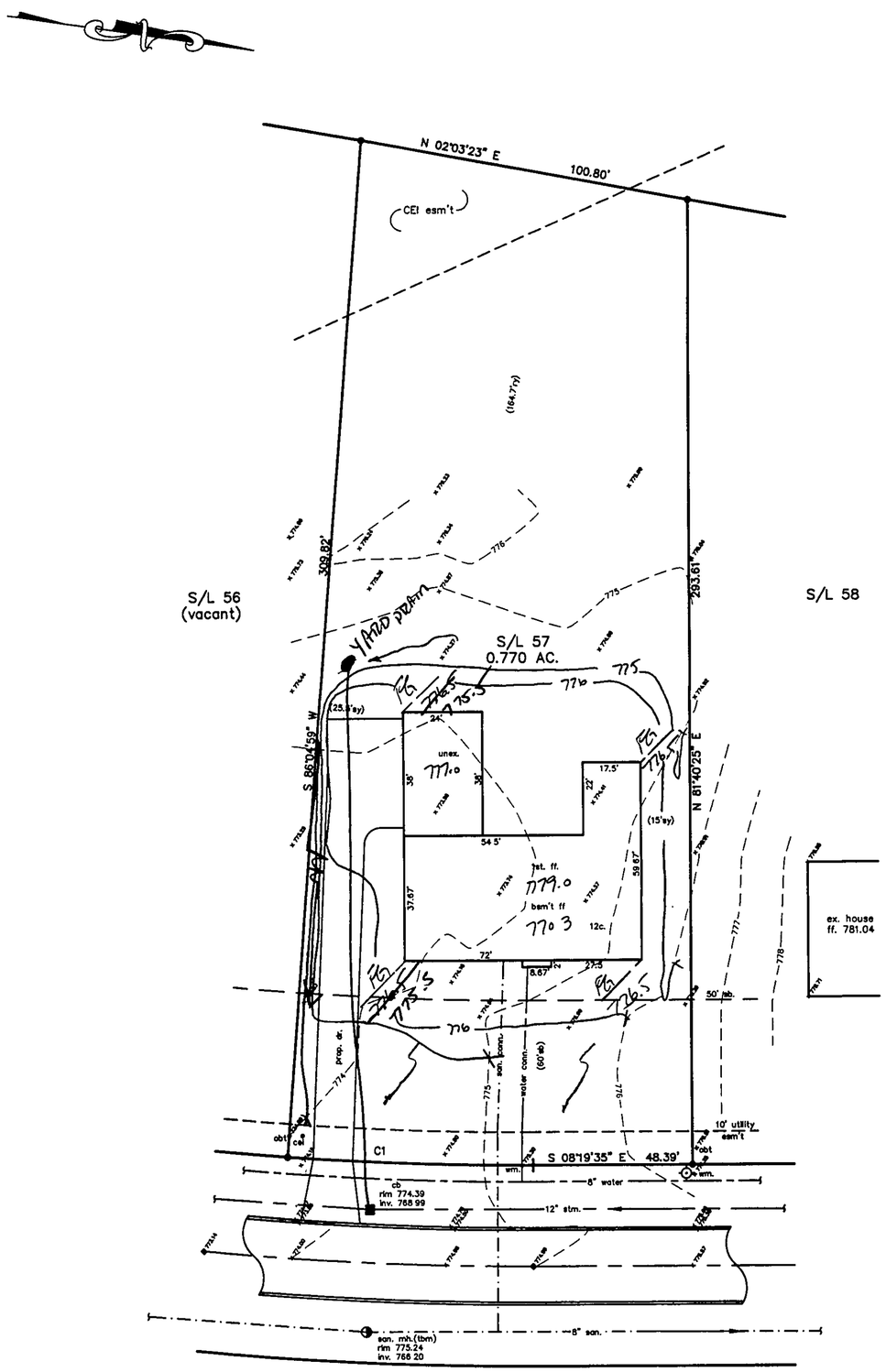

CANYON VIEW DRIVE – 60'

APPROVED
SIDE LINES & SET BACK
PERRY TOWNSHIP ZONING
PERMIT NO. 6872
ZONING INSPECTOR

SITE PLAN

PERRY TOWNSHIP, LAKE COUNTY, OHIO

for: DOUG BROWN
CLIENT OWNER

ADDRESS STREET CITY ZIP

CANYON RIDGE
SUBDIVISION NAME
26-10
VOL.-PG.
TRACT
STREET
57
SUBLOT NO.
CANYON VIEW
STREET
LOT
VOL.-PG.
PERM. PARCEL NO.

LEGEND

SANITARY MANHOLE
STORM MANHOLE
INLET OR CATCH BASIN
HYDRANT
EXISTING CONTOURS
PROPOSED CONTOURS

EXIST. ELEV. 100.0 / 100.0 PROP. ELEV.

AS BUILT ELEVATION

INDICATES DIRECTION OF SURFACE DRAINAGE

100.0

REMARKS

ALL BOUNDARY DATA SHOWN WAS OBTAINED FROM (DEEDS, RECORDED SUBDIVISION PLAT OR OTHER PUBLIC RECORDS)

LOCATIONS AS SHOWN OF ADJACENT WELLS AND SEPTIC TANKS OBTAINED FROM LAKE COUNTY HEALTH DEPARTMENT

DESIGN CERTIFICATION

THIS PLAT WAS PREPARED BY ME, AND IS CORRECT TO THE BEST OF MY KNOWLEDGE AND BELIEF.

NAME SURVEYOR REGISTRATION NO. #6343

CHECK LIST

NO. OF BEDROOMS
DIMENSIONS
BEARINGS
TIE TO NEAREST STREET
SUBLOT NO. PARCEL NO.
SURROUNDING OWNERS
BLDG. DIMENSIONS FIN GR.
BLDG. TIES FL'R. GRADES
APRON TYPE WIDTH THICKNESS
SIDEWALK TYPE WIDTH THICKNESS
CULVERT TYPE DIA., LENGTH
ROCK OUTCROPPINGS

WATER MAIN SIZE, LOCATION
SAN. SEWER SIZE % GR. LOC.
SAN. MH. CAST. ELEV. INV. ELEV.
SAN. CONN. SIZE, LOC. DEPTH
STORM SEWER SIZE % GR. LOC.
STORM MH. CAST ELEV. INV. ELEV.
PAV'T TYPE GRADE CURBS
GAS LINE LOC. SIZE PRESSURE
SEPTIC TANK LOCATION & DUPLICATION AREA
WELL LOCATION
ISOLATION RADIUS FROM WELL

REVISIONS		
NO.	DATE	BY
1		
2		
3		
4		
5		

PLAN PREPARED BY:
BABCOCK · JONES & ASSOCIATES, INC.
PAINESVILLE, OHIO

DRAWN BY T.R.	SCALE 1"=30'	PHONE NO. 440-357-1811	
CHK'D. H.J.	DATE 6/19/99	DRAWING NO. 91-233-57	
CREW CHIEF R.B.	APP'D H.J.		

"AS BUILT" CERTIFICATION
I, HEREBY CERTIFY THAT THE CIRCLED GRADES ARE EXISTING FINISH GRADES CHECKED IN THE FIELD ON _____, 19___ AND ARE CORRECT TO THE BEST OF MY KNOWLEDGE AND BELIEF.

REGISTERED SURVEYOR REG. NO.

C1: R=970.00'
L=74.65'
T=37.34'
D=04°24'34"
C=74.63'
N06°07'18"W

TBM–SANITARY MH. S/L 50
ELEV.=775.24

Grading Plan Approved as shown and/or not
THOMAS P. GILLES, P.E.
Lake County Engineer

By TAM Date 6/6/99
Swale as shown
Lower Flr. as noted
Install yard drain Example shown

ROOF DRAINS SHALL DISCHARGE TO SPLASH BLOCKS.

STATE OF OHIO
HARRY S. JONES, JR.
S-6343
REGISTERED
PROFESSIONAL SURVEYOR