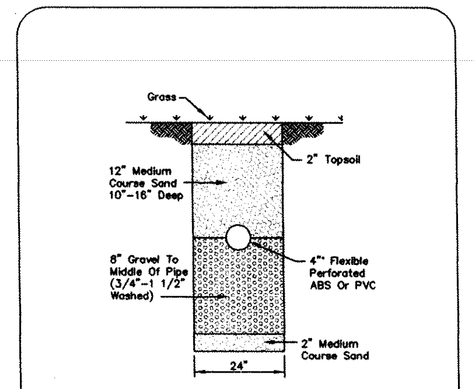

EVAPORATION-TRANSPIRATION TRENCH CROSS-SECTION
NO SCALE

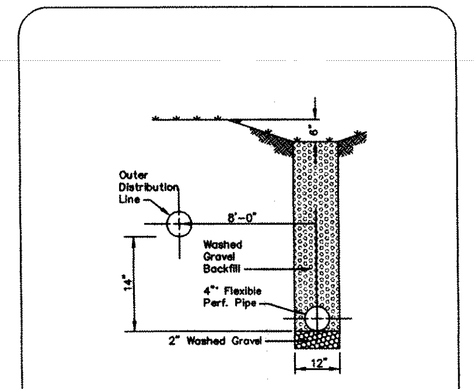

CURTAIN DRAIN CROSS SECTION
NO SCALE

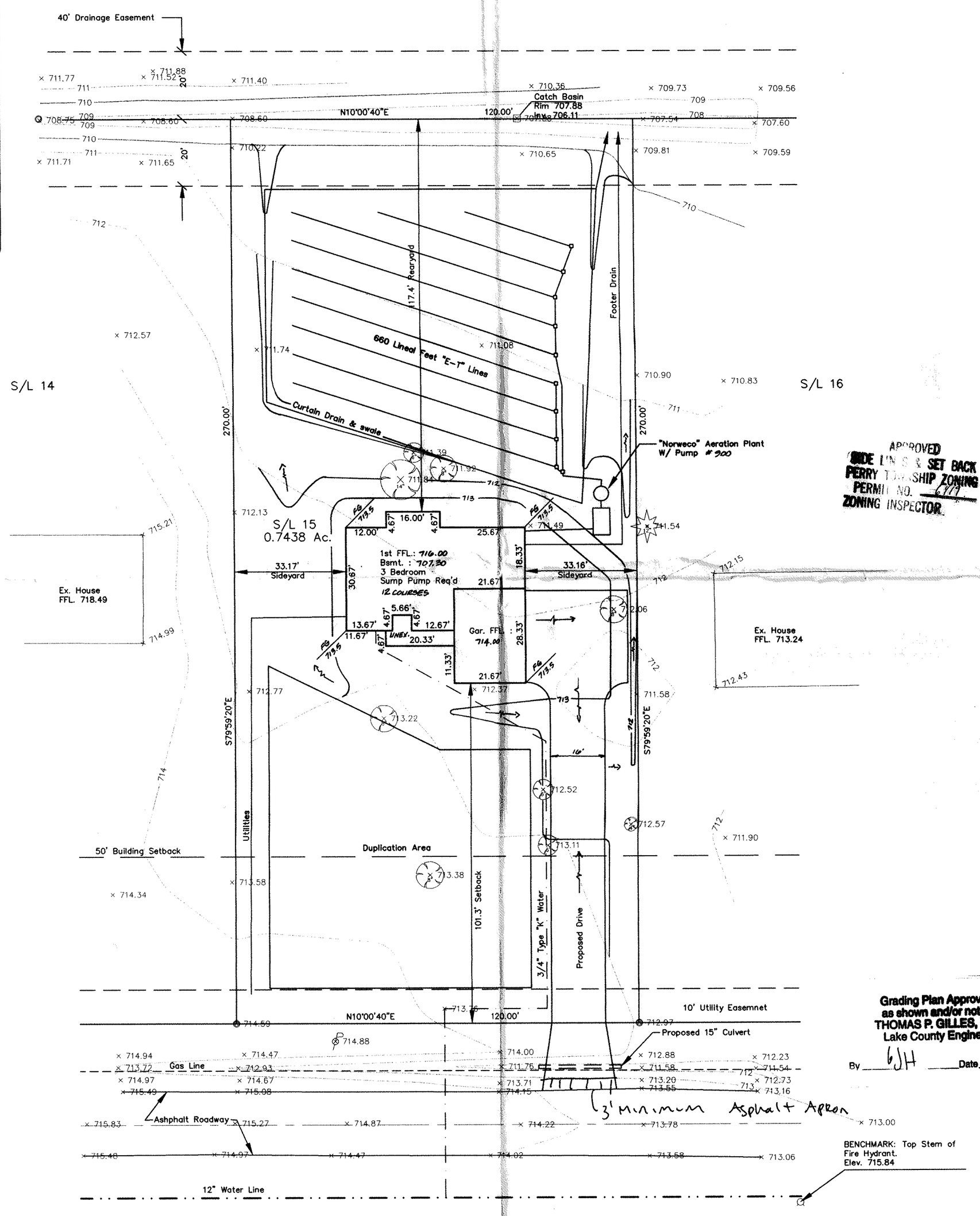

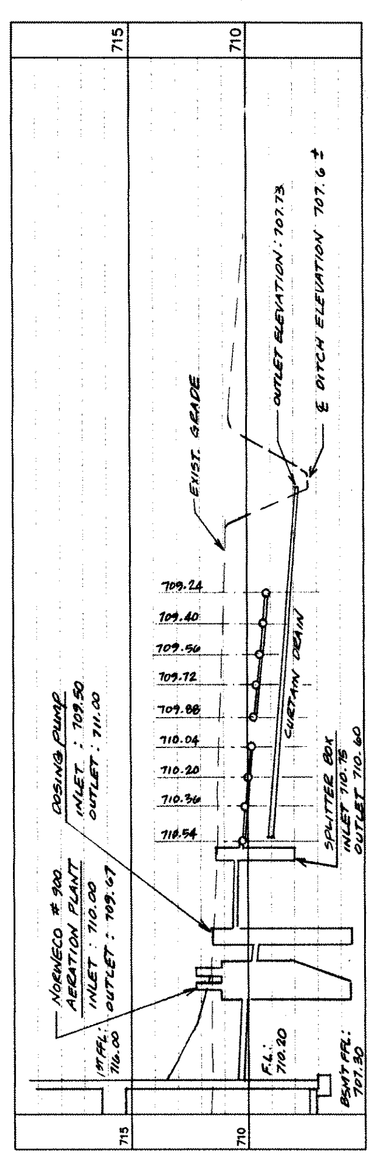

HYDRAULIC PROFILE
Horizontal : 1" = 30'
Vertical : 1" = 5'

Davis Road 60'

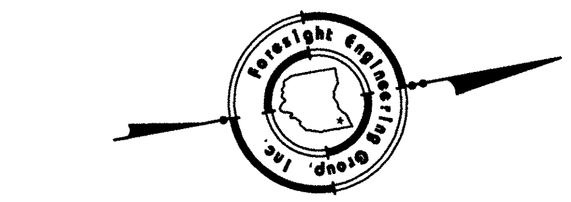

GRAPHIC SCALE
20 0 10 20 40 80
(IN FEET)
1 inch = 20 ft.

APPROVED
SIDE LINES & SET BACK
PERRY TOWNSHIP ZONING
PERMIT NO. 6717
ZONING INSPECTOR

SYMBOL LEGEND

- Iron Pin Found
- Fire Hydrant
- Power Pole
- Tree with size (REMOVE AS NECESSARY)
- Pine Tree with size "
- Catch Basin
- P.K. Set

LOW YIELD WATER FIXTURES REQUIRED ON ALL:
- Shower Head
- Toilet

A. To be brought to finished grade
1. Septic tank manhole covers
2. Splitter box cover
3. Distribution box cover

B. No footer drains or downspouts to be discharged into septic tanks

C. All waste water to be discharged into septic tanks

SEWAGE DISPOSAL PERMIT MUST BE OBTAINED BY A LAKE COUNTY LICENSED INSTALLER BEFORE INSTALLATION IS STARTED.

Reviewed and Accepted
LAKE COUNTY GENERAL HEALTH DISTRICT
Date 11-15-96
Keep OT trenches shallow
JOEL LUCIA, R. S., M. P. H.
Health Commissioner
BY J. Lindsay

Grading Plan Approved as shown and/or noted
THOMAS P. GILLES, P.E.
Lake County Engineer
By GJH Date 11.21.96

The topography, indicated by 1' contours, and elevations shown hereon represent an actual field survey made by Foresight Engineering Group, Inc. on November 1, 1996. The elevations were taken at appropriate intervals and as of the above date they existed as indicated hereon.
Steven N. Roessner 11/12/96
Foresight Engineering Group, Inc.

STATE OF OHIO STEVEN N. ROESSNER S-7070 REGISTERED PROFESSIONAL SURVEYOR

STATE OF OHIO FRANKLIN D. SNYDER, JR. 7468 REGISTERED PROFESSIONAL SURVEYOR

Foresight Engineering Group
Engineers & Surveyors
216 286-1010
216 285-1034 fax
320 Center Street, Unit F
Chardon, Ohio 44024

SCALE : Horz. 1" = 20'
Vert. None

FILE NAME: I:\Mcc19606\Topo

DATE : Nov. 12, 1996

REVISIONS:

McCullough Builders
South Perry Pines Subdivision
Perry Township - Lake County - Ohio
Site Plan - S/L No. 15

SHEET NO.
1/1