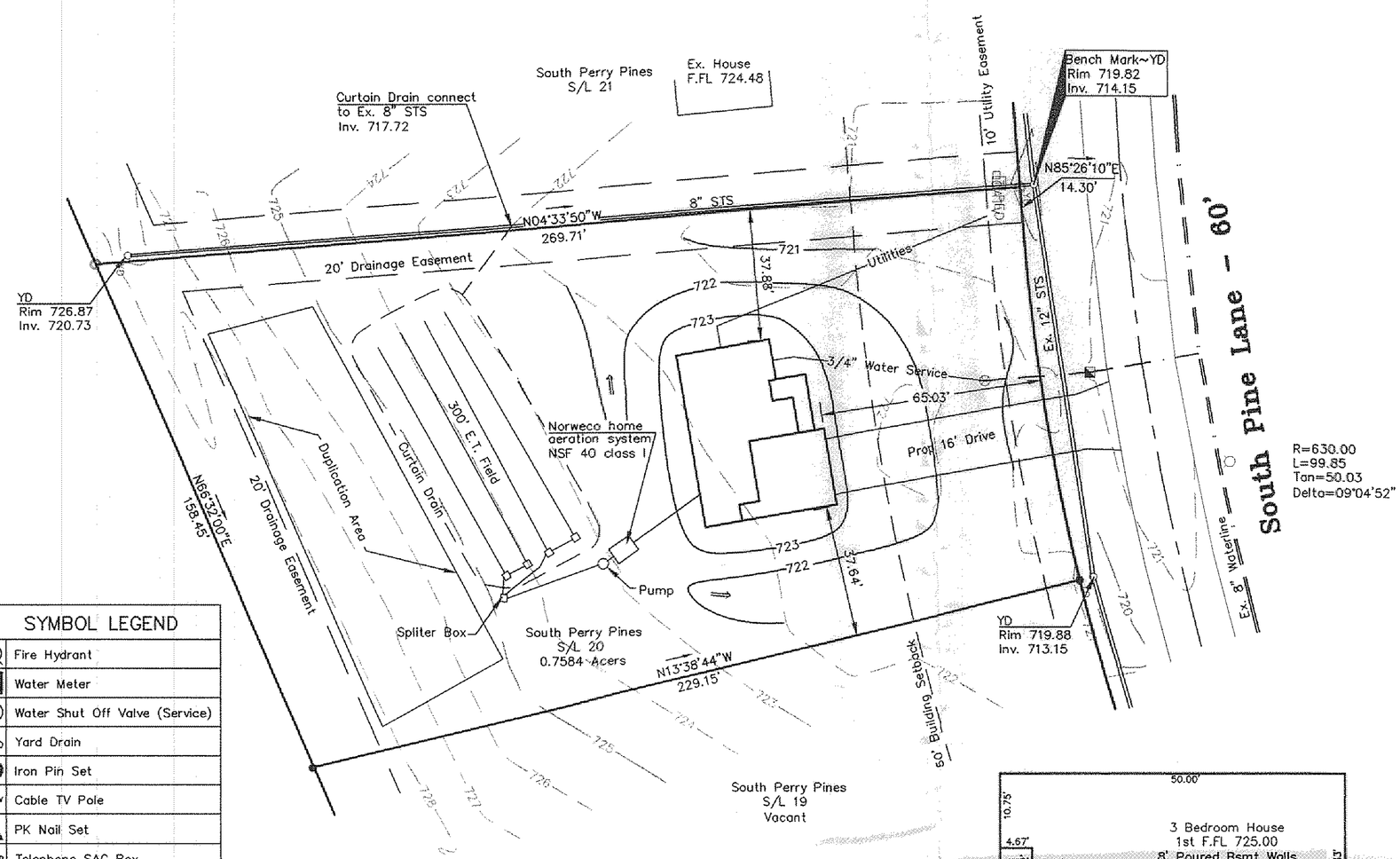

SYMBOL LEGEND	
	Fire Hydrant
	Water Meter
	Water Shut Off Valve (Service)
YD	Yard Drain
	Iron Pin Set
CATV	Cable TV Pole
	PK Nail Set
PED	Telephone SAC Box

GRAPHIC SCALE

30 0 15 30 60 120

(IN FEET)
1 inch = 30 ft.

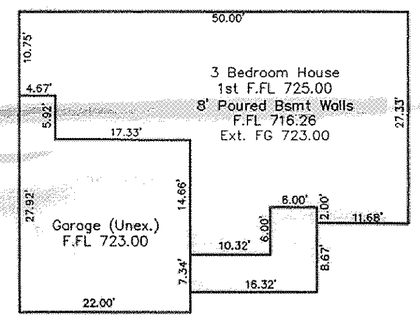

Foresight Engineering Group, Inc.

APPROVED
SIDE LINES & SET BACK
PERRY TOWNSHIP ZONING
PERMIT NO. 6723
ZONING INSPECTOR

REVIEWED AND ACCEPTED
LAKE COUNTY GENERAL
HEALTH DISTRICT
Date 9/25/98 BY

SEWAGE DISPOSAL PERMIT MUST BE OBTAINED BY A LAKE COUNTY LICENSED INSTALLER BEFORE INSTALLATION IS STARTED.

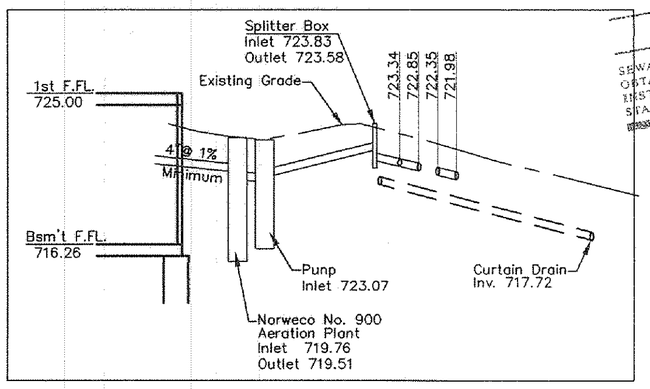

Hydraulic Profile

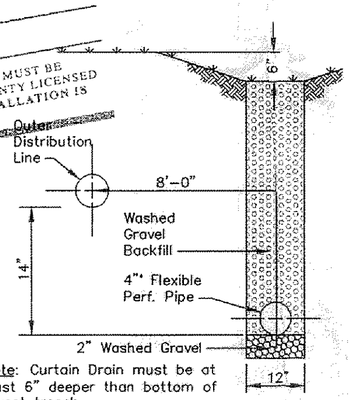

Note: Curtain Drain must be at least 6" deeper than bottom of lowest trench.

CURTAIN DRAIN CROSS SECTION
NO SCALE

Grading Plan Approved
as shown and/or note
THOMAS P. GILLES, P.E.
Lake County Engineer
By GH Date 10.5.98

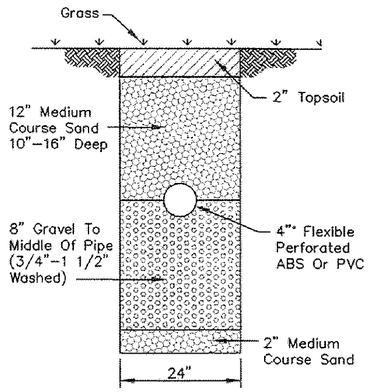

24" Optimal Depth
(18"-30" Allowable)

EVAPORATION-TRANSPIRATION
TRENCH CROSS-SECTION
NO SCALE

SITE PLAN

for : McCullough Builders & Developers
CLIENT

P.O. Box 349 — Perry Ohio 44081
ADDRESS — CITY STATE ZIP

20 — South Perry Pines
SUBLOT No. — SUBDIVISION NAME — VOL. PAGE

LOT — TRACT — Perry Twp. — Ohio
CITY — STATE

Foresight Engineering Group

440 286-1010
440 286-1034 fax
320 Center Street, Unit F
Chardon, Ohio 44024

Engineers & Surveyors

DESIGN CERTIFICATION

This Site Plan was prepared by Foresight Engineering Group, Inc., and is correct to the best of my knowledge and belief.

NAME

CHECK LIST

LOT DIMENSIONS & BEARINGS
TIE TO NEAREST STREET
SUBLOT No. (PARCEL No.)
SURROUNDING OWNERS
BUILDING DIMENSIONS
SETBACK, SIDEYARD, REARYARD
FINISH GRADES
DRIVE & APRON TYPE, WIDTH, THICKNESS
SIDEWALK TYPE, WIDTH, THICKNESS
CULVERT TYPE, DIAM., LENGTH
WATER MAIN SIZE, LOCATION
SAN. SEWER SIZE, % GRADE, LOC.
SAN. MH. CAST. ELEV., INV. ELEV.
SAN. CONN. SIZE, % GRADE. LOC.
STROM SEWER SIZE, % GRADE. LOC.
STORM MH. CAST. ELEV., INV. ELEV.
PAV'T TYPE, GRADE, CURBS
GAS LINE LOC., SIZE
SEPTIC SYSTEM & DUPLICATION
WELL LOCATION & ISOLATION RADIUS

STATE OF OHIO
ROGER M. NALL
30421
REGISTERED PROFESSIONAL ENGINEER

STATE SEAL

"AS BUILT" CERTIFICATION

I hereby certify that the circled information is existing as obtained on the site _____ 19___ and is correct to the best of my knowledge and belief.

NAME

SCALE : 1" = 30	1	
FILE NAME: I:\Mcc19808\Site.Dwg	2	
DATE : Sept. 23, 1998	3	

BENCHMARK: Yard Drain Rim elev. = 719.82

"I, the undersigned hereby certify that this topography, indicated by 6", 1' or 2' contours, and the elevations shown hereon represent an actual field survey made by Foresight Engineering Group, Inc. on the 4 day of Sept., 19 98 and that the elevations were taken at appropriate intervals and that as of that date they existed as indicated hereon."

NAME

2 WORKING DAYS BEFORE YOU DIG
CALL TOLL FREE 800-362-2764
OHIO UTILITIES PROTECTION SERVICE

EXISTING UNDERGROUND UTILITIES NOTES:
The location both horizontal and vertical of the underground utilities shown hereon, have been obtained by a diligent and comprehensive search of available records. Verification by field observation, has been conducted where practical. However, Foresight Engineering Group, Inc. does not guarantee the completeness nor accuracy thereof.

I:\sdskproj\Mcc19808\Cad\Site.dwg Wed Sep 23 16:53:36 1998 Copyright Foresight Engineering Group, Inc.