SITE PLAN

for : McCullough Builders & Developers
CLIENT

P.O. Box 349 — ADDRESS
Perry — CITY
Oh — STATE
44081 — ZIP

35 — SUBLOT No.
South Perry Pines — SUBDIVISION NAME
VOL. PAGE

LOT — TRACT
Perry Twp. — CITY
OH — STATE

Foresight Engineering Group

440 286-1010
440 286-1034 fax
320 Center Street, Unit F
Chardon, Ohio 44024

Engineers & Surveyors

SCALE : 1" = 40'	1
FILE NAME: I:\Mcc10003\Siteplan	2
DATE : March 6, 2000	3

GRAPHIC SCALE

40 0 20 40 80 160

(IN FEET)
1 inch = 40 ft.

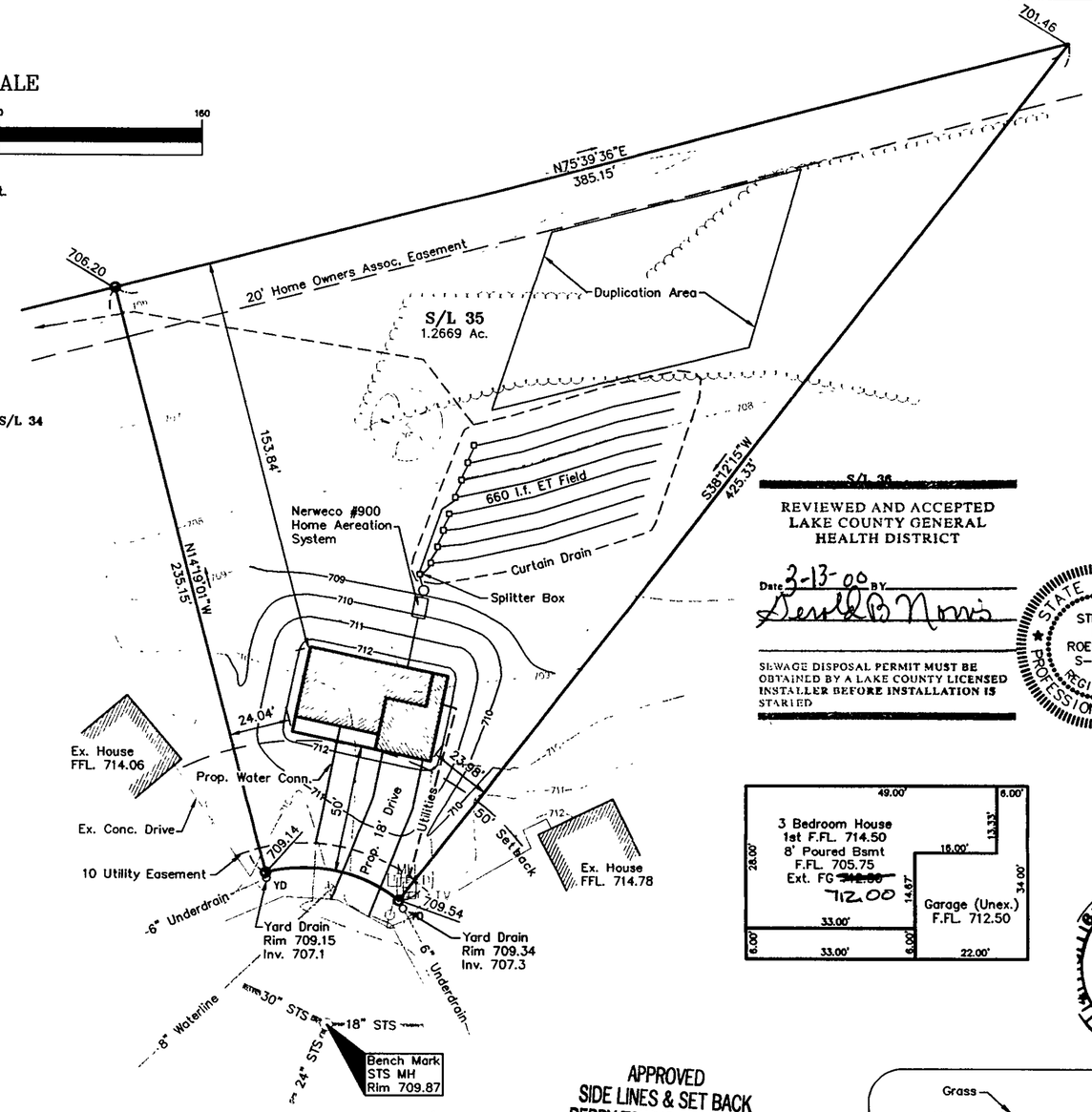

Scotch Pine Court ~ 60'

S/L 36

REVIEWED AND ACCEPTED
LAKE COUNTY GENERAL
HEALTH DISTRICT

Date 3-13-00 BY. [signature]

SEWAGE DISPOSAL PERMIT MUST BE OBTAINED BY A LAKE COUNTY LICENSED INSTALLER BEFORE INSTALLATION IS STARTED

STATE OF OHIO
STEVEN N. ROESSNER
S-7070
REGISTERED
PROFESSIONAL SURVEYOR

BENCHMARK: STS MH Rim 709.87

"I, the undersigned hereby certify that this topography, indicated by 6", 1' or 2' contours, and the elevations shown hereon represent an actual field survey made by Foresight Engineering Group, Inc. on the 25 day of February 2000 and that the elevations were taken at appropriate intervals and that as of that date they existed as indicated hereon."

[signature]
NAME

2 WORKING DAYS BEFORE YOU DIG
CALL TOLL FREE 800-362-2764
OHIO UTILITIES PROTECTION SERVICE

EXISTING UNDERGROUND UTILITIES NOTES:
The location both horizontal and vertical of the underground utilities shown hereon, have been obtained by a diligent and comprehensive search of available records. Verification by field observation, has been conducted where practical. However, Foresight Engineering Group, Inc. does not guarantee the completeness nor accuracy thereof.

RECEIVED MAR 7 2000 PLANNING COMMISSION

Zoning District ~ ER-1
Front Setback 50'
Rear Setback 15'
Side Setback 15'

Grading Plan Approved as shown and/or noted
THOMAS P. GILLES, P.E.
Lake County Engineer
By TPG Date 3/20/2000
Attn. Erosion and Sediment Control plan may need ~~approval~~ submitted to LCSWCD

APPROVED
SIDE LINES & SET BACK
PERRY TOWNSHIP ZONING
PERMIT NO. 6949
ZONING INSPECTOR

SYMBOL LEGEND	
◯	Manhole
◎	Iron Pin Found
YD	Yard Drain
⊗	Water Valve
℄	Light Pole
CCATV	Cable T
TP PED	Telephone SAC Box

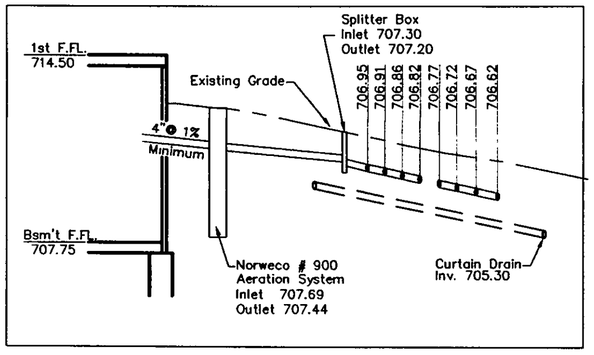

Hydraulic Profile

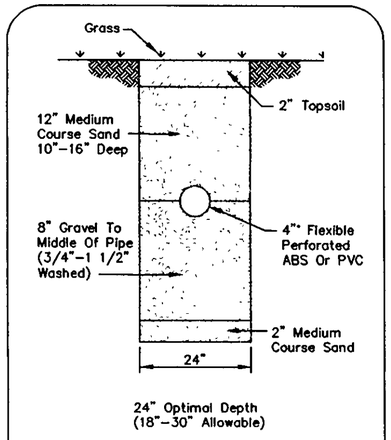

EVAPORATION-TRANSPIRATION TRENCH CROSS-SECTION
NO SCALE

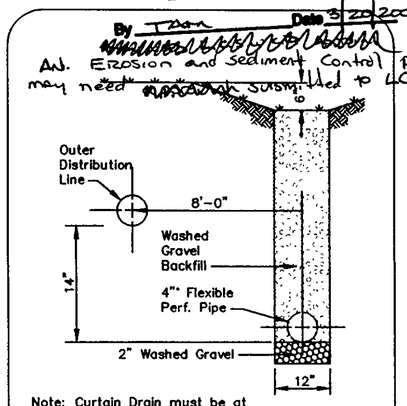

Note: Curtain Drain must be at least 6" deeper than bottom of lowest trench.

CURTAIN DRAIN CROSS SECTION
NO SCALE

\sdskproj\Mcc10003\cad\Siteplan.dwg Mon Mar 06 15:17:34 2000 Copyright Foresight Engineering Group, Inc.