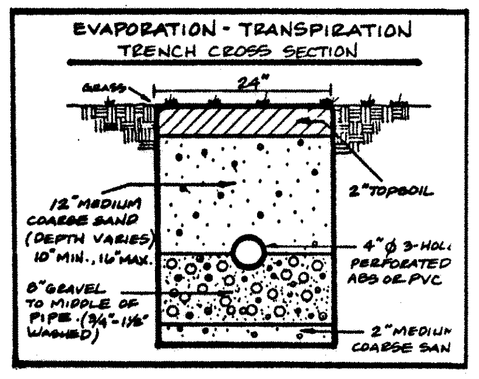

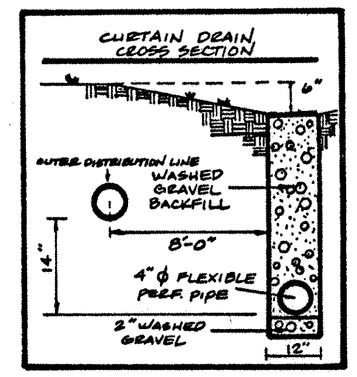

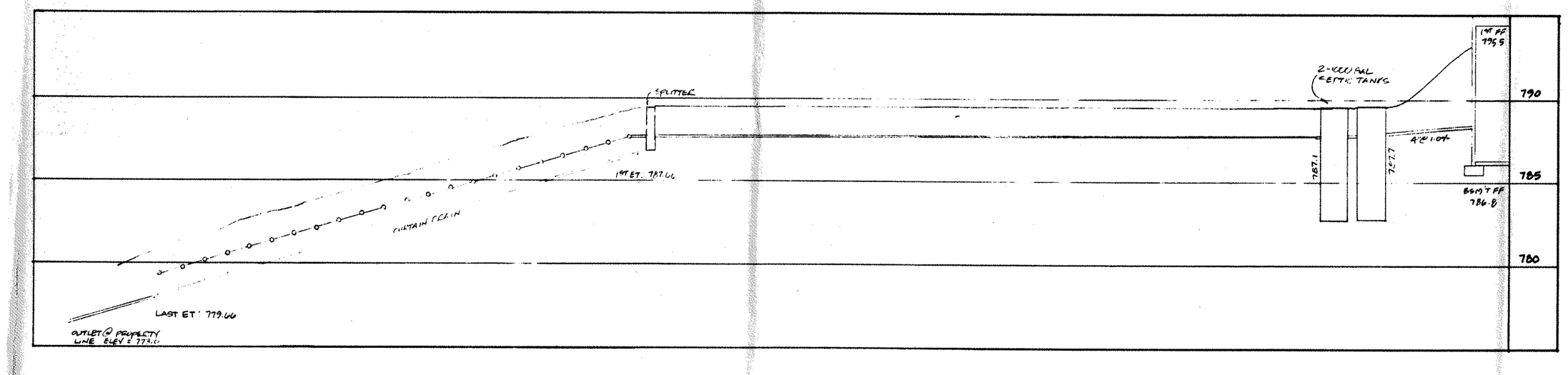

HYDRAULIC PROFILE
HORZ. 1"=30', VERT. 1"=5'

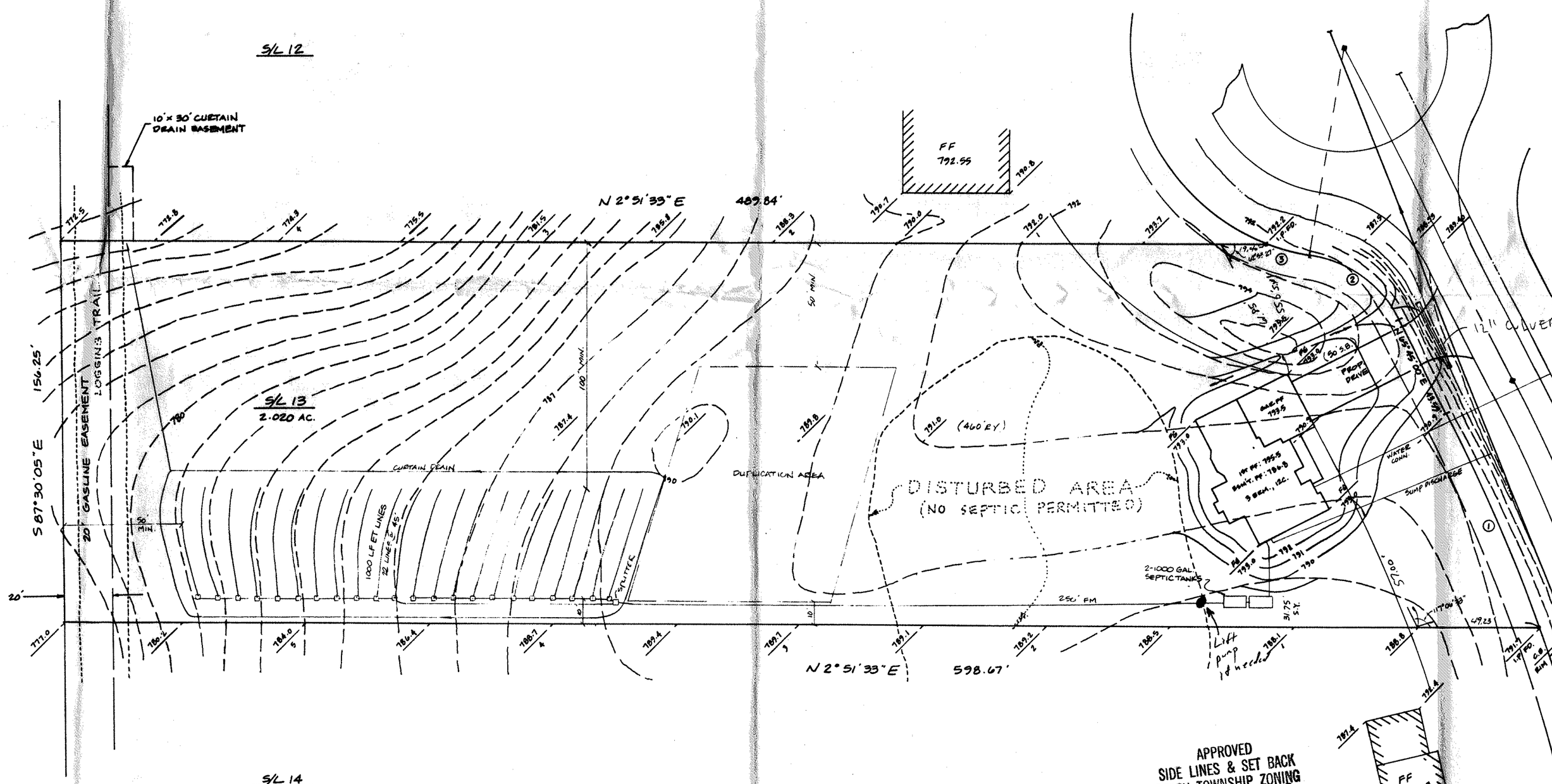

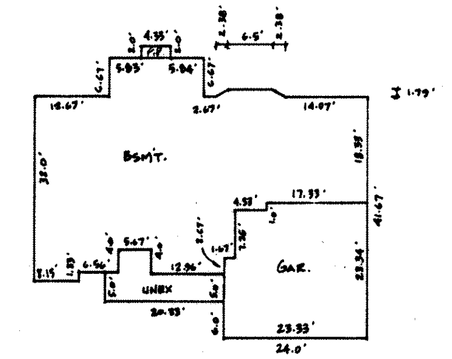

SEWAGE DISPOSAL PERMIT MUST BE OBTAINED BY A LAKE COUNTY LICENSED INSTALLER BEFORE INSTALLATION IS STARTED.

LOW YIELD WATER FIXTURES REQUIRED ON ALL:
__ Shower Head
__ Toilet
__ _____

A. To be brought to finished grade
1. Septic tank manhole covers
2. Splitter box cover
3. Distribution box cover
B. No footer drains or downspouts to be discharged into septic tanks
C. All waste water to be discharged into septic tanks

CURVE DATA S/L 13

① R=720.00', A=94.91', C=94.34'
S 69°30'23" W, Δ=7°30'46"

② R=50.00', A=46.83', C=45.13'
S 38°55'14" W, Δ=53°39'32"

③ R=85.00', A=16.66', C=16.63'
S 17°42'19" W, Δ=11°13'32"

Reviewed and Accepted
LAKE COUNTY GENERAL HEALTH DISTRICT
Date 3-24-95
Need 1" in 8' of fill from septic tanks to ET field
May need to add a lift pump
JOEL LUCIA, R. S., M. P. H.
Health Commissioner
BY J. Lindsay

BENCHMARK: TOP OF HYDRANT, ELEV. = 793.57

APPROVED
SIDE LINES & SET BACK
PERRY TOWNSHIP ZONING
PERMIT NO. 6077
ZONING INSPECTOR

Grading Plan Approved as shown and/or noted
THOMAS P. GILLES, P.E.
Lake County Engineer
By GJH Date 4/4/95

"I, the undersigned hereby certify that this topography indicated by 6", 1' or 2' contours, and elevations shown hereon represent an actual field survey made by me on the 27th day of Feb, 1995 and that the elevations were taken at appropriate intervals and that as of that date they existed as indicated hereon."
Harry Jones #6343
Reg. No.

STATE OF OHIO
HARRY S. JONES, JR.
S-6343
REGISTERED SURVEYOR

☐ System is in accordance with overall on-site sewage disposal system plan.

☒ System is different than shown on overall on-site sewage disposal system plan.

Reviewed by: Carmen Bertrand Date: 3/23/95
CT Consultants, Inc.

REV NO.	DESCRIPTION	DATE	BY	CHK'D
1	REVISE TOPOGRAPHY & SEPTIC SYSTEM	3/20/95	PL	HG

SITE PLAN
FOR
CRAIG PULLING

BABCOCK, JONES AND ASSOCIATES, INC
CIVIL ENGINEERS - SURVEYORS - LAND PLANNERS
PAINESVILLE OHIO 44077

DATE MARCH 1, 1995
DESIGN BY HT
DRAWN BY PL
APPROVED BY HT

S/L 13 TURNBURY SUBDIVISION
VOL. 20 - PG. 33 (L.C.R.P.)
PERRY TOWNSHIP · LAKE COUNTY · OH.

SCALE 1"=30'
JOB NO 93-243-13
SHEET 1 OF 1