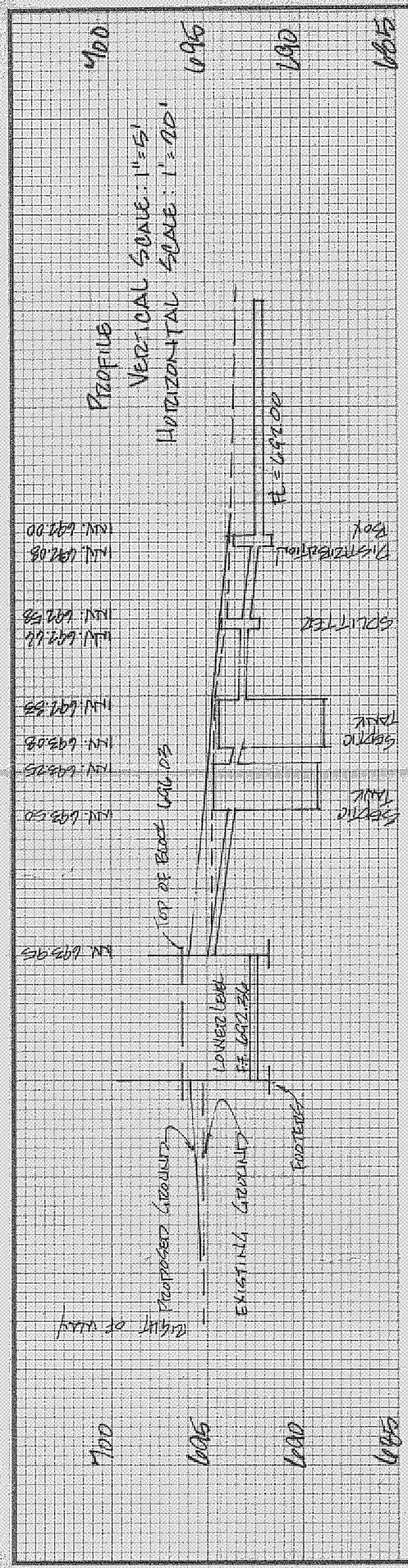

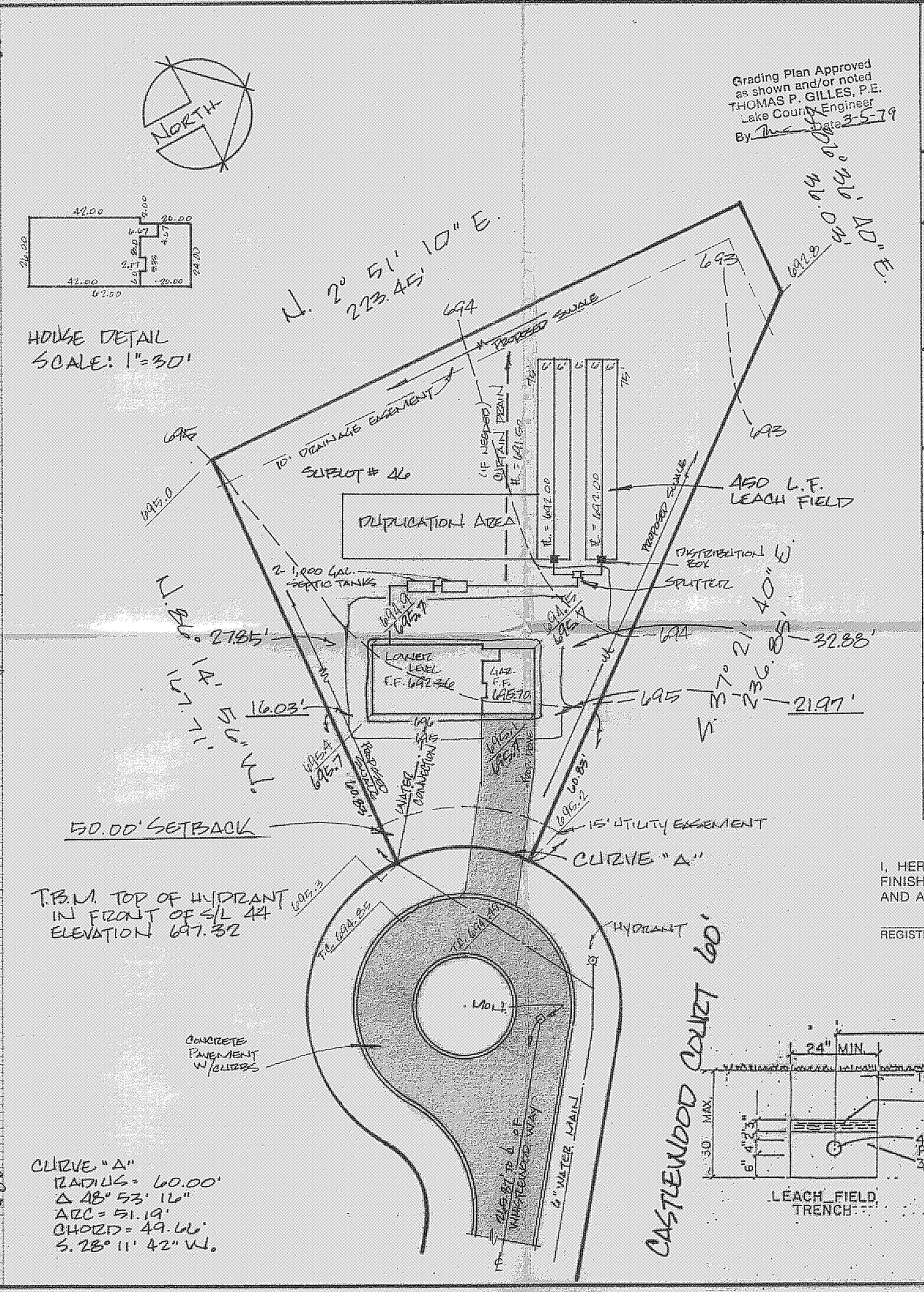

Grading Plan Approved as shown and/or noted
THOMAS P. GILLES, P.E.
Lake County Engineer
By [signature] Date 3-5-79

SITE PLAN

VILLAGE OF PERRY (TOWNSHIP) LAKE COUNTY, OHIO

for: B.S.M. (CLIENT) (OWNER)

ADDRESS STREET CITY ZIP

RUSTIC VILLAGE #2 (SUBDIVISION) (NAME)
46 (SUBLOT NO.) VOL. PG. CASTLEWOOD (STREET)

LOT TRACT
VOLUME PAGE
PERM. PARCEL NO. STREET

LEGEND

SANITARY MANHOLE
STORM MANHOLE
INLET OR CATCH BASIN
HYDRANT
EXISTING CONTOURS
PROPOSED CONTOURS
EXIST. ELEV. 100.0 / 100.0 PROP. ELEV.

WATER VALVE (GAS)
WATER METER (GAS)
AS BUILT ELEVATION
INDICATES DIRECTION OF SURFACE DRAINAGE

REMARKS

ALL BOUNDARY DATA SHOWN WAS OBTAINED FROM (DEEDS, RECORDED SUBDIVISION PLAT OR OTHER PUBLIC RECORDS)

LOCATIONS AS SHOWN OF ADJACENT WELLS AND SEPTIC TANKS OBTAINED FROM LAKE COUNTY HEALTH DEPARTMENT

DESIGN CERTIFICATION

THIS PLAT WAS PREPARED BY ME, AND IS CORRECT TO THE BEST OF MY KNOWLEDGE AND BELIEF.

[signature] P.S. #6528
NAME SURVEYOR REGISTRATION NO.

CHECK LIST

NO. OF BEDROOMS
DIMENSIONS
BEARINGS
TIE TO NEAREST STREET
SUBLOT NO. PARCEL NO.
SURROUNDING OWNERS
BLDG. DIMENSIONS FIN. GR.
BLDG. TIES FL'R. GRADES
APRON TYPE WIDTH THICKNESS
SIDEWALK TYPE WIDTH THICKNESS
CULVERT TYPE DIA., LENGTH
ROCK OUTCROPPINGS

WATER MAIN SIZE, LOCATION
SAN. SEWER SIZE % GR. LOC.
SAN. MH. CAST. ELEV. INV. ELEV.
SAN. CONN. SIZE, LOC. DEPTH
STORM SEWER SIZE % GR. LOC.
STORM MH. CAST ELEV. INV. ELEV.
PAV'T TYPE GRADE CURBS
GAS LINE LOC. SIZE PRESSURE
SEPTIC TANK LOCATION & DUPLICATION AREA
WELL LOCATION
ISOLATION RADIUS FROM WELL

REVISIONS		
NO.	DATE	BY
1		
2		
3		
4		
5		

PLAN PREPARED BY:
DEBEVEC • SALO & ASSOCIATES, INC.
125 E. ERIE ST. PAINESVILLE, OHIO

DRAWN BY KELLY	SCALE 1" = 30	PHONE NO. 352-9250
CHK'D.	DATE 2/2/79	DRAWING NO. 5226-46
CREW CHIEF R.H.	APP'D.	

"AS BUILT" CERTIFICATION

I, HEREBY CERTIFY THAT THE CIRCLED GRADES ARE EXISTING FINISH GRADES CHECKED IN THE FIELD ON _____, 19__ AND ARE CORRECT TO THE BEST OF MY KNOWLEDGE AND BELIEF.

REGISTERED SURVEYOR REG. NO.

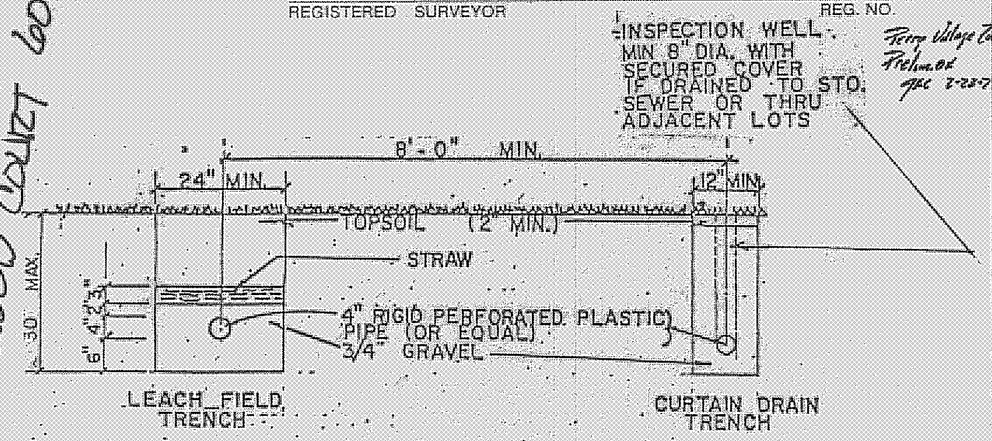

TYPICAL SECTION
SCALE 1/2" = 1'-0"

FEB 16 1979