NORTH

NOTE:
AN ALTERNATE SOURCE OF POWER SHALL BE PROVIDED FOR THE SUMP PUMP ON ALL UNITS THAT REQUIRE SUMP PUMPS.

"AS-BUILT" CERTIFICATION

I HEREBY CERTIFY THAT THE CIRCLED INFORMATION IS EXISTING AS OBTAINED ON THE SITE _____ AND IS CORRECT TO THE BEST OF MY KNOWLEDGE AND BELIEF.

I ALSO HEREBY CERTIFY THAT AS OF THAT DATE EROSION CONTROL ITEMS WERE IN PLACE PER THE APPROVED SITE PLAN.

DATE NAME

SITE PLAN GENERAL NOTES:
SEE IMPROVEMENT PLANS FOR THE LANDING AT DUGAN'S FARM CONDO, PHASE 2, FOR EROSION CONTROL AND GRADING ITEMS.

THE CONDOMINIUM BOUNDARY MUST BE STAKED TO CONFIRM BUILDING LOCATIONS.

DRIVEWAYS SHALL BE 6" THICK AND HAVE 3' FLARES ON EACH SIDE.

F.G. = ELEVATION OF GARAGE FLOOR AT FRONT OF GARAGE.

000.00 = SPOT ELEVATIONS

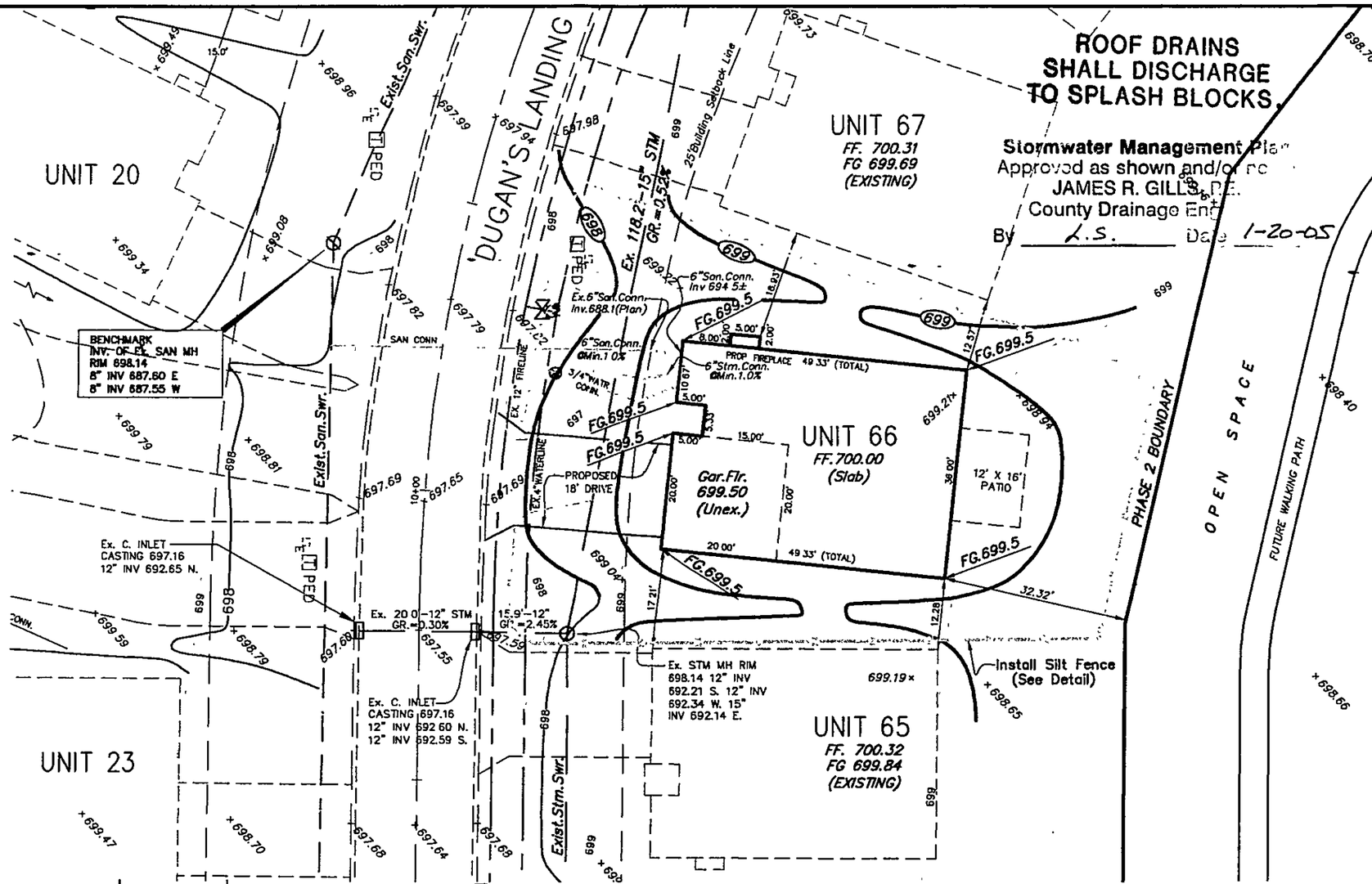

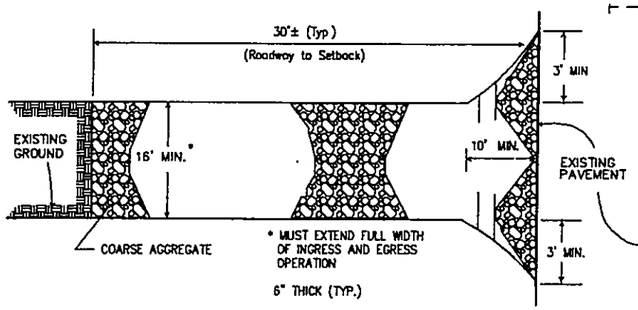

STONE CONSTRUCTION ENTRANCE

NO SCALE

APPROVED
☐ AS NOTED
☑ AS SUBMITTED
☐ NOT APPROVED
JW 1-14-05
SIGNATURE

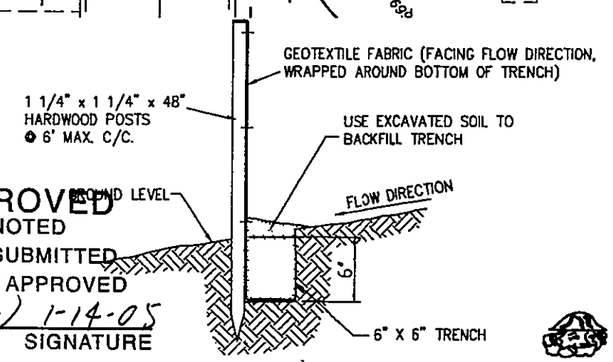

SILT FENCE
TYPICAL CROSS SECTION

STATE OF OHIO
CHARLES W. SZUCS S-8240
REGISTERED PROFESSIONAL SURVEYOR

I, THE UNDERSIGNED, HEREBY CERTIFY THAT THIS TOPOGRAPHY, INDICATED BY 6", 1', OR 2' CONTOURS, AND ELEVATIONS SHOWN HEREON, REPRESENT AN ACTUAL FIELD SURVEY MADE BY ME ON THE 25th DAY OF SEPTEMBER, 2003, AND THAT THE ELEVATIONS WERE TAKEN AT APPROPRIATE INTERVALS AND THAT AS OF THAT DATE, THEY EXISTED AS INDICATED HEREON.

CHARLES W. SZUCS, P.S. #8240

Site & Grade Hse. 1-12-05

2 WORKING DAYS BEFORE YOU DIG
CALL TOLL FREE 800-362-2764
OHIO UTILITIES PROTECTION SERVICE
NON-MEMBERS MUST BE CALLED DIRECT

EXISTING UNDERGROUND UTILITIES NOTE:
THE SIZE AND LOCATION, BOTH HORIZONTAL AND VERTICAL OF THE UNDERGROUND UTILITIES SHOWN HEREON, HAVE BEEN OBTAINED BY A SEARCH OF AVAILABLE RECORDS. VERIFICATION BY FIELD OBSERVATION HAS BEEN CONDUCTED WHERE PRACTICAL. HOWEVER, POLARIS ENGINEERING & SURVEYING, INC. DOES NOT GUARANTEE THE COMPLETENESS NOR ACCURACY THEREOF.

polaris Engineering & Surveying

POLARIS ENGINEERING & SURVEYING, INC.
34800 CHARDON ROAD
SUITE D
WILLOUGHBY HILLS, OH 44094
(440) 944-4433
(440) 944-3722 (Fax)
www.polaris-es.com

DATE: 1/12/05
SCALE: HOR. 1"=20' VERT. none
FILENAME: 11105 Siteplan Unit 66
COMPUTER: S:
CREW CHIEF: xxx

SITE PLAN FOR:
SUBLOT No. 66
(3949 Dugan's Landing)
The Landing At Dugan's Farm Condo, Phase 2
PERRY VILLAGE - LAKE COUNTY - OHIO

OWNER:
DUGAN'S LANDING, LLC
P.O. BOX 949
CHARDON, OHIO 44024

PHONE: (440) 354-6401
FAX: (440) 354-5780

CONTACT:
Bill Johnson

CONTRACT No.
03519

SHEET	OF
1	1