APPROVED
☐ AS NOTED
☑ AS SUBMITTED
☐ NOT APPROVED
EW 1-9-04
SIGNATURE

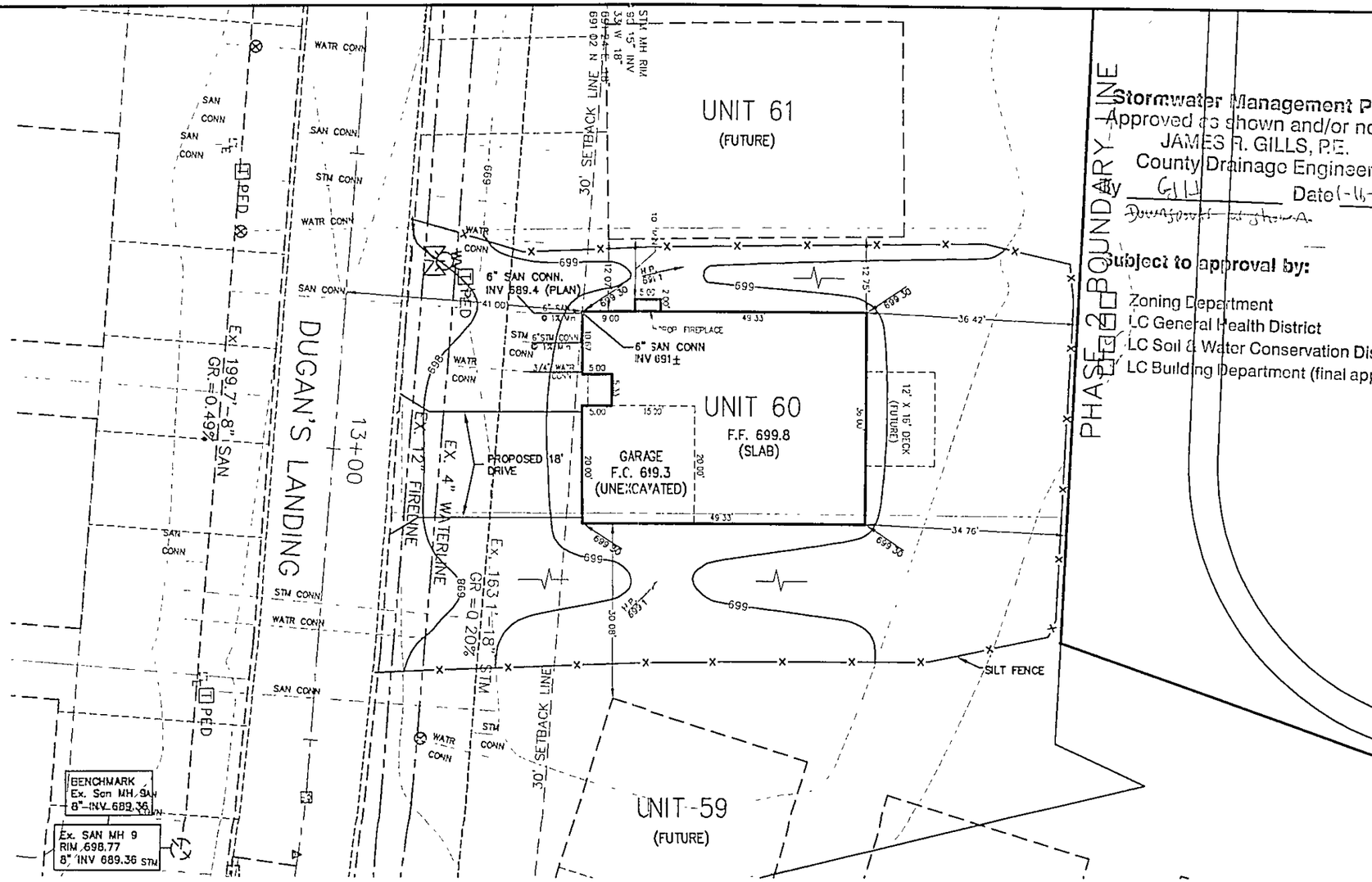

SITE PLAN GENERAL NOTES:
SEE IMPROVEMENT PLANS FOR THE LANDING AT DUGAN'S FARM CONDO, PHASE 2, FOR EROSION CONTROL AND GRADING ITEMS.

THE CONDOMINIUM BOUNDARY MUST BE STAKED TO CONFIRM BUILDING LOCATIONS.

DRIVEWAYS SHALL BE 6" THICK AND HAVE 3' FLARES ON EACH SIDE.

F.G. = ELEVATION OF GARAGE FLOOR AT FRONT OF GARAGE.

000.00 = SPOT ELEVATIONS

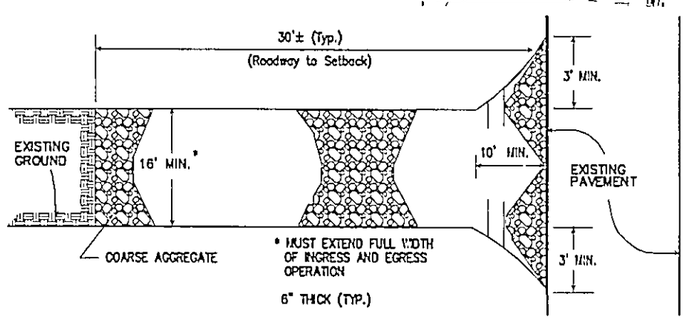

STONE CONSTRUCTION ENTRANCE

NO SCALE

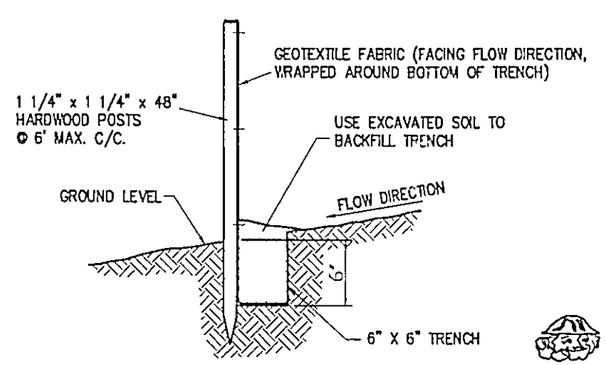

SILT FENCE
TYPICAL CROSS SECTION

STATE OF OHIO
CHARLES W. SZUCS
S-8240
REGISTERED
PROFESSIONAL SURVEYOR

I, THE UNDERSIGNED, HEREBY CERTIFY THAT THIS TOPOGRAPHY, INDICATED BY 6", 1', OR 2' CONTOURS, AND ELEVATIONS SHOWN HEREON, REPRESENT AN ACTUAL FIELD SURVEY MADE BY ME ON THE 26th DAY OF SEPTEMBER, 2003, AND THAT THE ELEVATIONS WERE TAKEN AT APPROPRIATE INTERVALS AND THAT AS OF THAT DATE, THEY EXISTED AS INDICATED HEREON.

CHARLES W. SZUCS, P.S. # 8240

2 WORKING DAYS BEFORE YOU DIG
CALL TOLL FREE 800-362-2764
OHIO UTILITIES PROTECTION SERVICE
NON-MEMBERS MUST BE CALLED DIRECT

EXISTING UNDERGROUND UTILITIES NOTE:
THE SIZE AND LOCATION, BOTH HORIZONTAL AND VERTICAL OF THE UNDERGROUND UTILITIES SHOWN HEREON, HAVE BEEN OBTAINED BY A SEARCH OF AVAILABLE RECORDS. VERIFICATION BY FIELD OBSERVATION HAS BEEN CONDUCTED WHERE PRACTICAL. HOWEVER, POLARIS ENGINEERING & SURVEYING, INC. DOES NOT GUARANTEE THE COMPLETENESS NOR ACCURACY THEREOF.

Stormwater Management Plan
Approved as shown and/or noted
JAMES R. GILLS, P.E.
County Drainage Engineer
By GJH Date 1-16-04
Downspout as shown

Subject to approval by:
Zoning Department
LC General Health District
LC Soil & Water Conservation District
LC Building Department (final approval)

polaris
POLARIS ENGINEERING & SURVEYING, INC.
34600 CHARDON ROAD
SUITE D
WILLOUGHBY HILLS, OH 44094
(440) 944-4433
(440) 944-3722 (Fax)
www.polaris-es.com

DATE: 12/16/03
SCALE: HOR. 1"=20'
VERT. none
FILENAME: Siteplan-Base
COMPUTER: FS
CHIEF: xxx

SITE PLAN FOR:
SUBLOT No. 60
(Dugan's Landing)
The Landing At Dugan's Farm Condo, Phase 2
PERRY VILLAGE - LAKE COUNTY - OHIO

OWNER:
DUGAN'S LANDING, LLC
P.O. BOX 949
CHARDON, OHIO 44024

PHONE: (440) 354-6401
FAX: (440) 354-5780

CONTACT:
Bill Johnson

CONTRACT No.
03519

SHEET	OF
1	1

Fs\Projects\03519\dwg\SITEPLAN-BASE.dwg, 12/29/2003 11:40:40 AM